www.koolance.com

Specifications Sheet

Generated: 2026-11-20

P/N: CHC-36-D06

CHC-36-D06 Water Block (Motherboard Chipset) [06mm, 1/4in ID]



The CHC-36-D06 is a low profile northbridge/southbridge chipset cooler made of copper and plated in 24k gold. Flexible mounting hardware allows it to mount virtually any type of motherboard, including "hook style" heat sink mounts.

General	
Weight	0.70 lb (0.32 kg)
Wetted Materials	Gold-Plated Copper

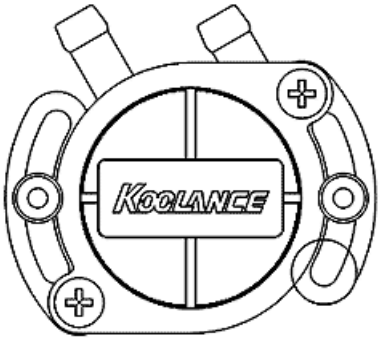

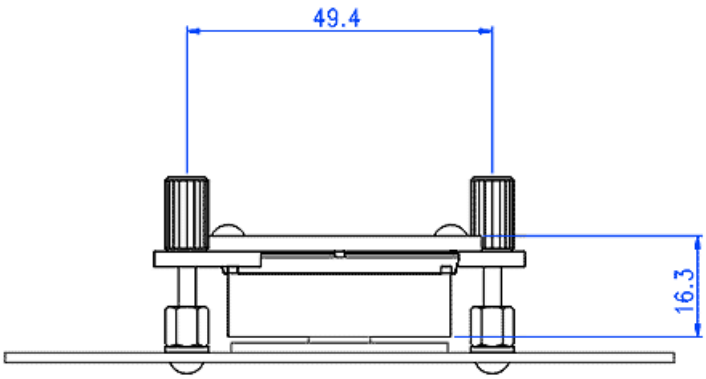

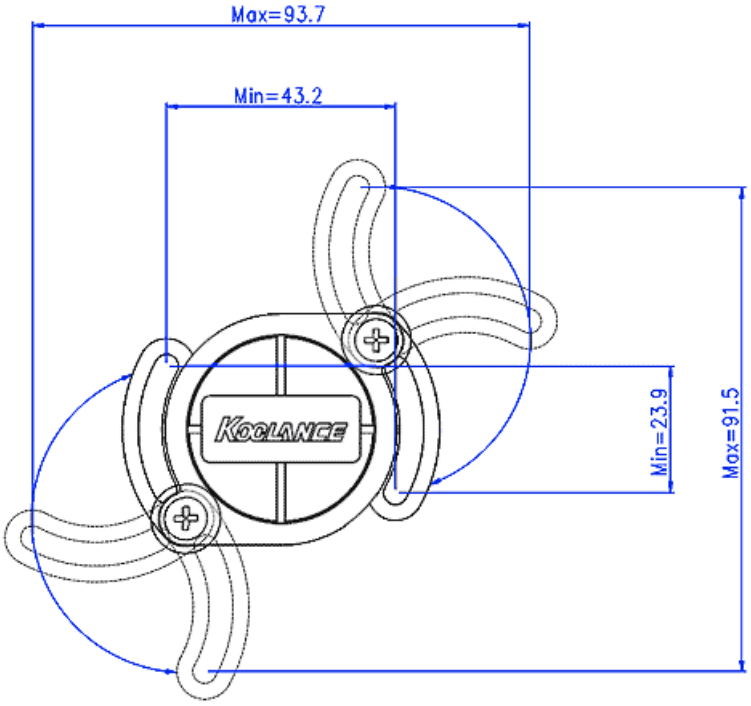
Max=93.7
Min=43.2
Min=23.9
Max=91.5
KOOLANCE

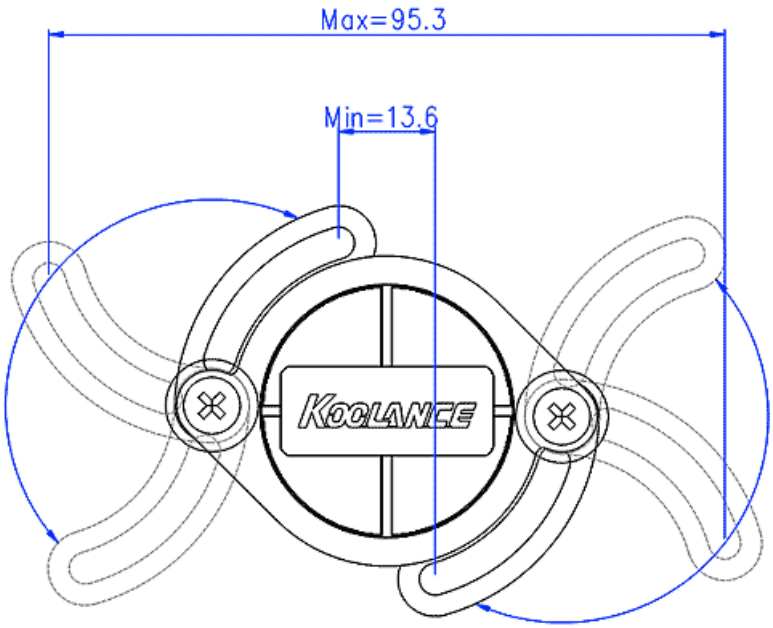
Max=95.3
Min=13.6
KOOLANCE

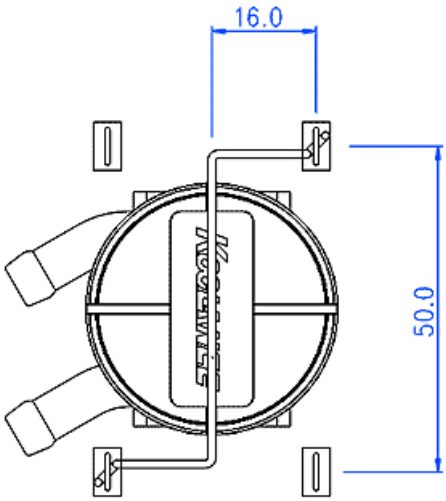
16.0
50.0

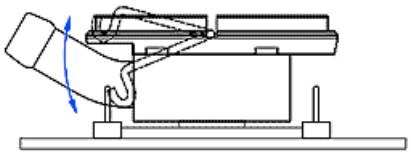

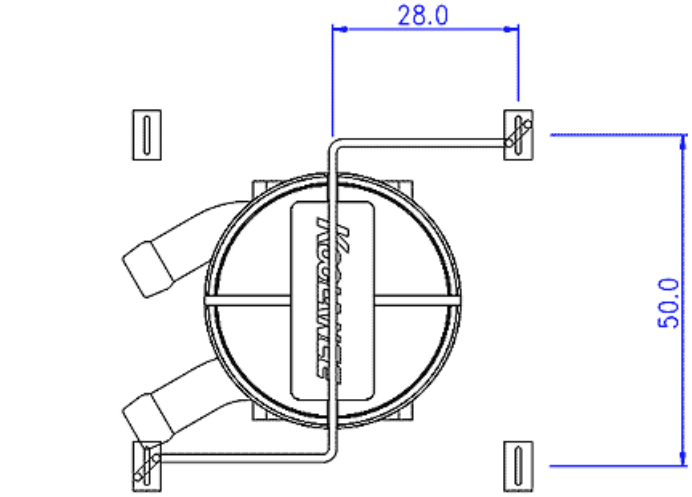
28.0
50.0

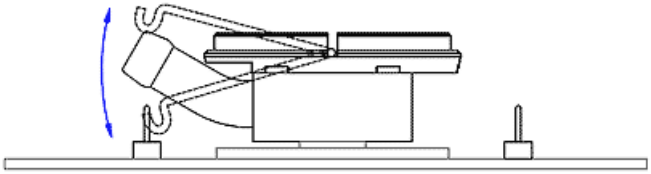

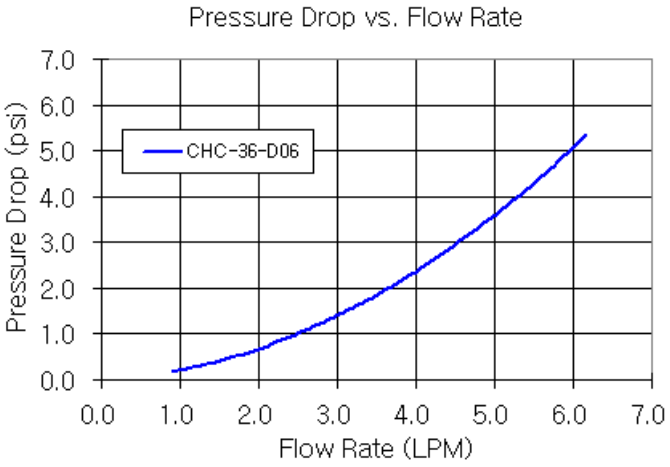
Pressure Drop vs. Flow Rate
Pressure Drop (psi)
7.0
6.0
5.0
4.0
3.0
2.0
1.0
0.0
CHC-36-D06
0.0
1.0
2.0
3.0
4.0
5.0
6.0
7.0
Flow Rate (LPM)

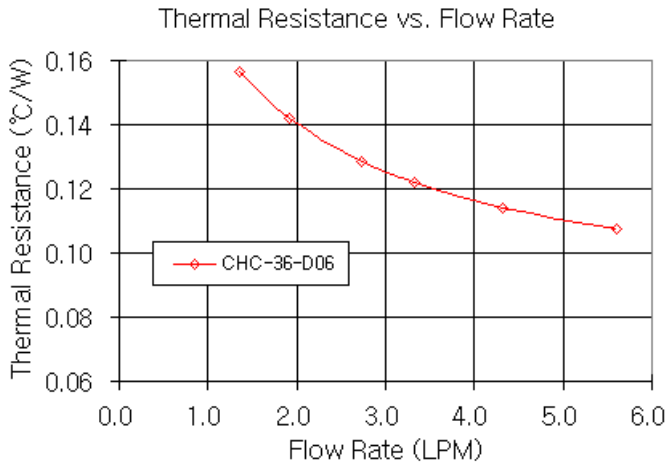
Thermal Resistance vs. Flow Rate
Thermal Resistance (℃/W)
0.16
0.14
0.12
0.10
0.08
0.06
CHC-36-D06
0.0
1.0
2.0
3.0
4.0
5.0
6.0
Flow Rate (LPM)

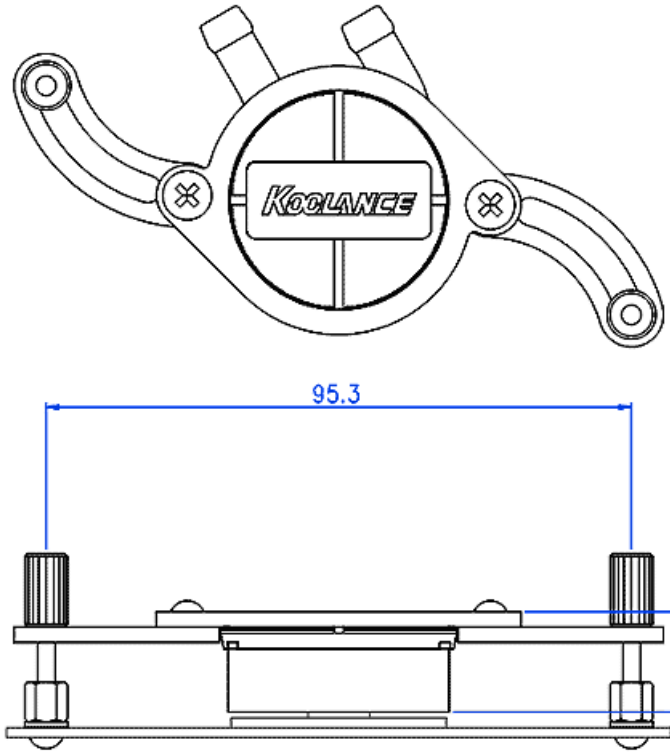
KOOLANCE
95.3
16.3

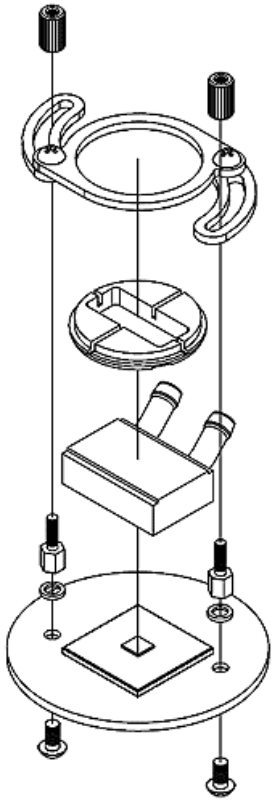

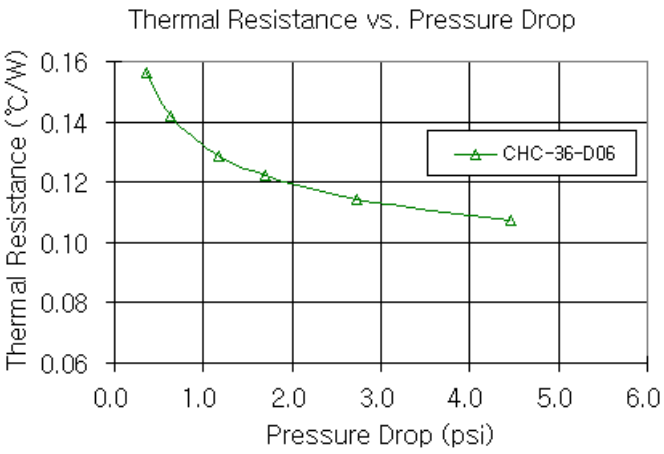
Thermal Resistance vs. Pressure Drop
Thermal Resistance (℃/W)
0.16
0.14
0.12
0.10
0.08
0.06
0.0
1.0
2.0
3.0
4.0
5.0
6.0
Pressure Drop (psi)
CHC-36-D06