www.koolance.com

Specifications Sheet

Generated: 2026-11-27

P/N: ADT-SMM-G38

Fitting Coupling Adapter, Swiveling Male-Male, G 3/8 BSPP



ADT-SMM-G38 is a Male-Male G 3/8 BSPP (parallel) thread swiveling coupler.

General	
Weight	0.13 lb (0.06 kg)
Fitting Thread	G 3/8 BSPP
Max Pressure Tolerance @ 25°C	8kgf/cm2 (113.8psi)
Max Temperature Tolerance	100°C (212°F)
Wetted Materials	Brass, Nickel Plating, EPDM

File

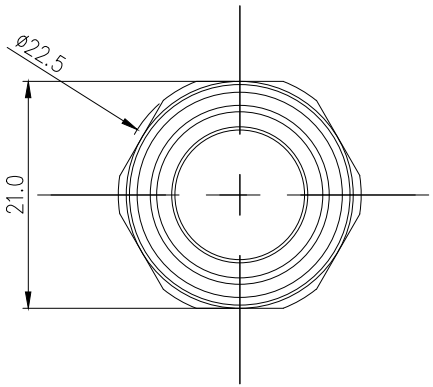

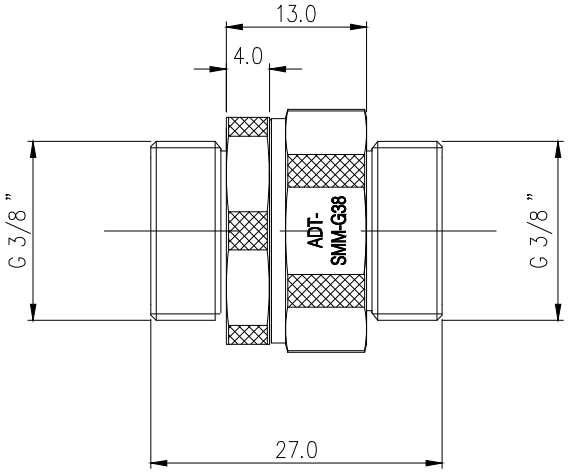

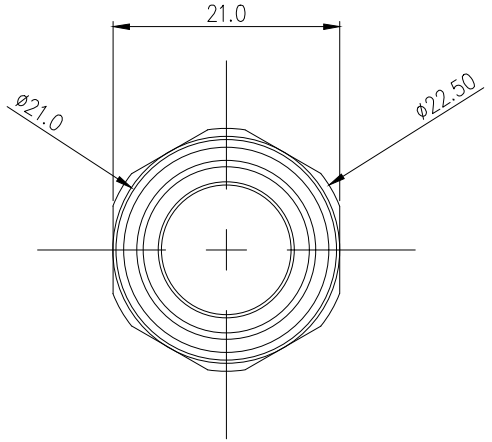

NO.	DESCRIPTION				MATER'L		QUANTITY	REMARKS
KOOLANCE INC.					UNIT	MM	APPAR ADT-SMM-G38	
	BY	BY	BY	APPRD BY	SCALE	N/S	TITLE	
DATE					3RD ANGLE		Ass'y	
	SK.AN				REF. NO.		DWG. NO.	