www.koolance.com

Specifications Sheet

Generated: 2026-11-19

P/N: EHX-1050SL

EHX-1050SL External 1kW Radiator and Fans/Enclosure, Silver



ATX computer case not included.

Missing out on 1000W of liquid cooling because you would like to keep your case? The Koolance EHX-1050 is a triple 120mm **externally** mounted radiator, intended for use with the Koolance 5.25" bay RP-1000 reservoir and pump.

The EHX-1050 features the same dual-pass heat exchanger, brushed aluminum shroud, and fans as the Koolance PC4-1000 1kW series systems. But it also comes with a highly adjustable bracket and lightweight aluminum enclosure for external mounting behind practically any ATX computer chassis. All that is required is a side panel with at least two rear mounting screws. 10mm (3/8in) ID quick disconnect shut-off valves are included with the L-bracket.

The versatility of the EHX-1050 comes from it's adjustable bracket. It is hinged for easy access to the computer. The EHX-1050 can be mounted from 3" to 5" (7-13cm) behind the computer for cable clearance. At only 16.5" (42cm) tall, even smaller ATX chassis can accommodate it. The EHX-1050 can be mounted vertically from ground level up to 10" (25.4cm) high on taller computers, and shifted 1.25" (3.2cm) left and right to remain centered behind the chassis.

General	
Weight	10.00 lb (4.54 kg)
Wetted Materials	Aluminum
Radiators	
Fan Capacity	3 x 120mm
Fins Per Inch (FPI)	18

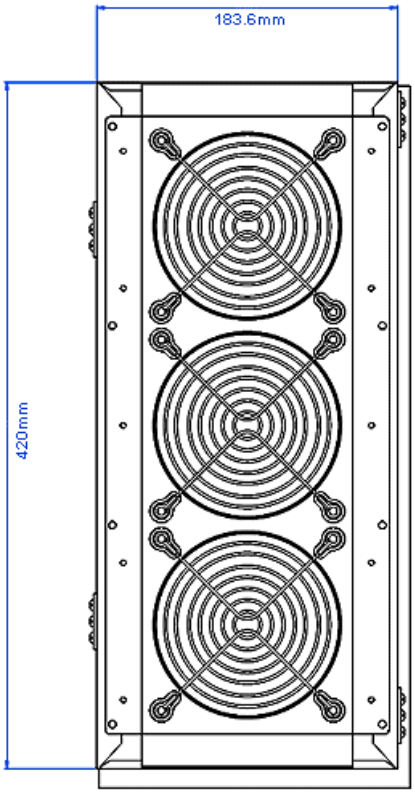
183.6mm
420mm

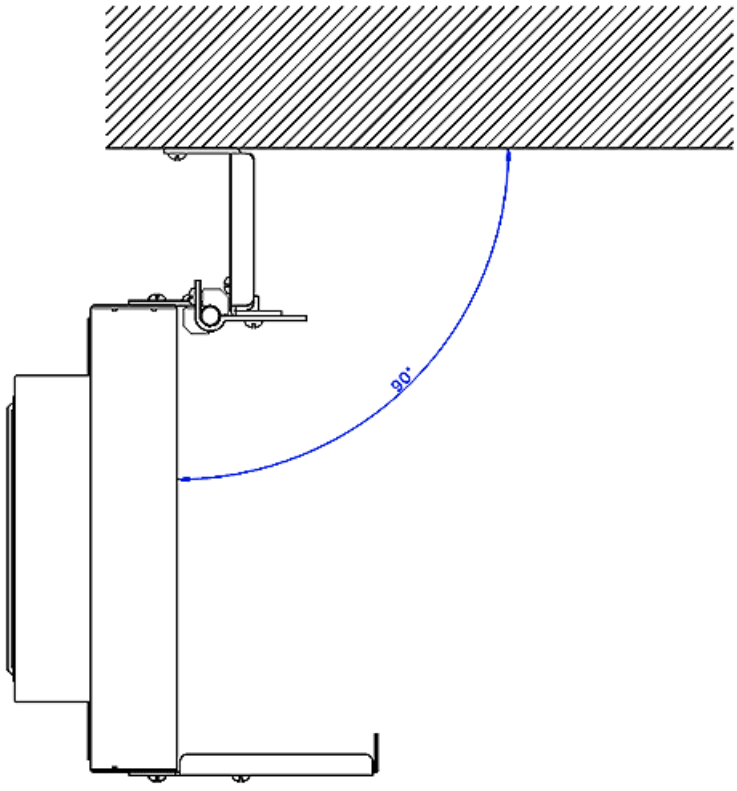
90°

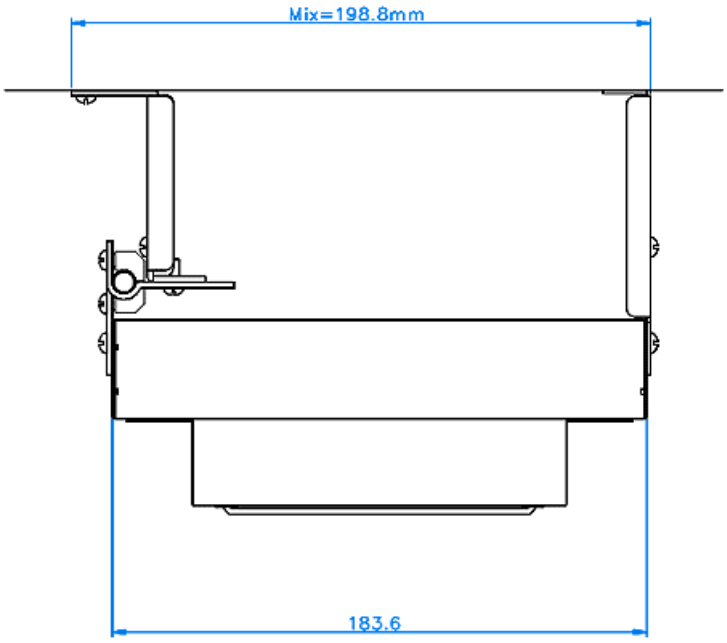
Mix=198.8mm
183.6

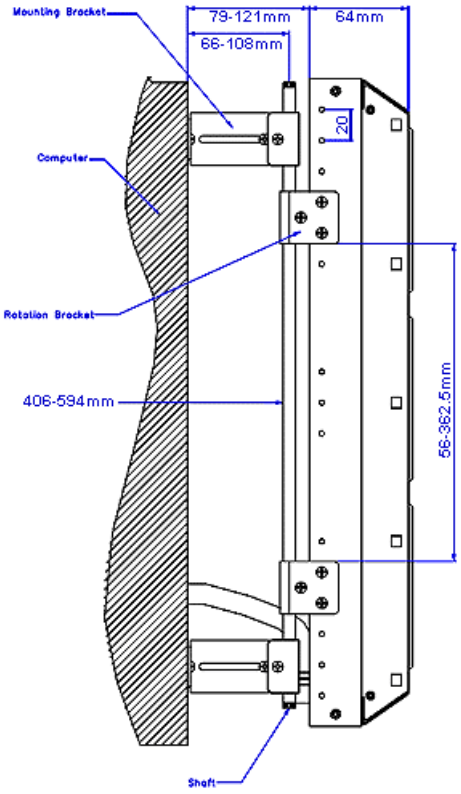
Mounting Bracket
79-121mm
64mm
66-108mm
20
Computer
Rotation Bracket
406-594mm
66-362.5mm
Shaft