www.koolance.com

Specifications Sheet

Generated: 2026-11-21

P/N: ERM-2K3U_R0

ERM-2K3U Liquid Cooling System, Rev1.0



The ERM-2K3U continues Koolance's "ERM" series of dedicated liquid cooling systems for special thermal applications. It can provide up to approximately 2000W of potential heat dissipation, and is housed in a lightweight aluminum enclosure. A prominent white LED-lit reservoir displays the coolant level, combining a waterfall effect when placed upright.

Heat sources from multiple computers can be connected to a single ERM-2K3U system if within the total dissipation rating. The ERM-2K3U utilizes a single PMP-450 pump. A large louver-fin heat exchanger stretches diagonally from front to back, cooled by two 220mm blue LED side fans, and five low-flow 80mm rear fans.

The cooling system can be configured in multiple ways. Wide feet are included for vertical operation in a "tower" position. Post feet allow a horizontal installation, with fans facing up or down. Alternatively, the unit fits within a 3U profile and rack mountable ears are included. The LED readout can be conveniently rotated for any position. (NOTE: 3 bottles of coolant is recommended for the ERM-2K3U.)

Other features:

- Variable pump speed via the front display
- Rear G 1/4 BSPP inlet and outlet fitting sockets
- Radiator fan speeds adjust automatically, or with 10 manual levels
- White reservoir LED lighting (can be switched on or off)
- Top coolant fill plug
- Independently-variable alarm and safety shutdown temperatures on all three sensors
- Adapted power connection - does not require an AC power outlet

General	
Weight	24.20 lb (10.98 kg)
Cooling Systems	
Display Type	LED
Fans	2 x 220mm (81CFM), 5 x 80mm (210CFM)
Max Flow Rate (10-13mm ID)	PMP-450 @ 12V
Power Source	12 VDC
Radiator	Aluminum
Temperature Sensors	50K Thermistors

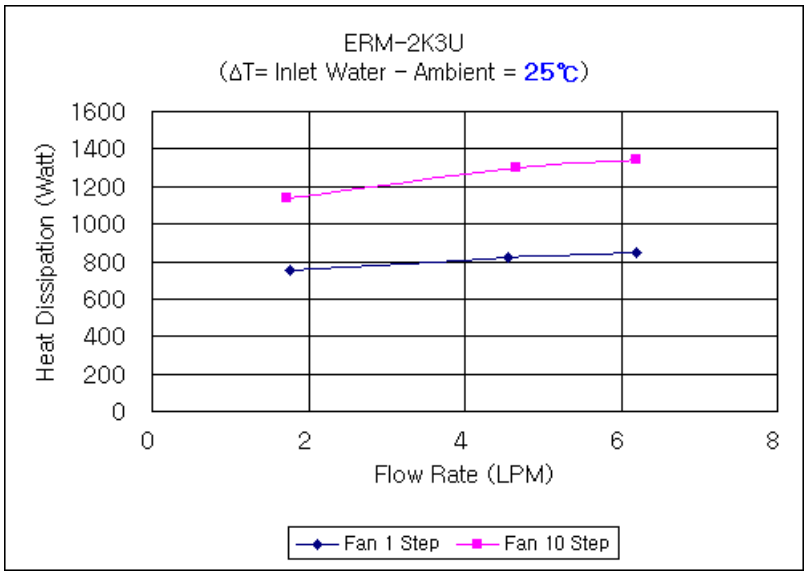
ERM-2K3U
(ΔT= Inlet Water - Ambient = 25℃)
Heat Dissipation (Watt)
1600
1400
1200
1000
800
600
400
200
0
0
2
4
6
8
Flow Rate (LPM)
Fan 1 Step
Fan 10 Step

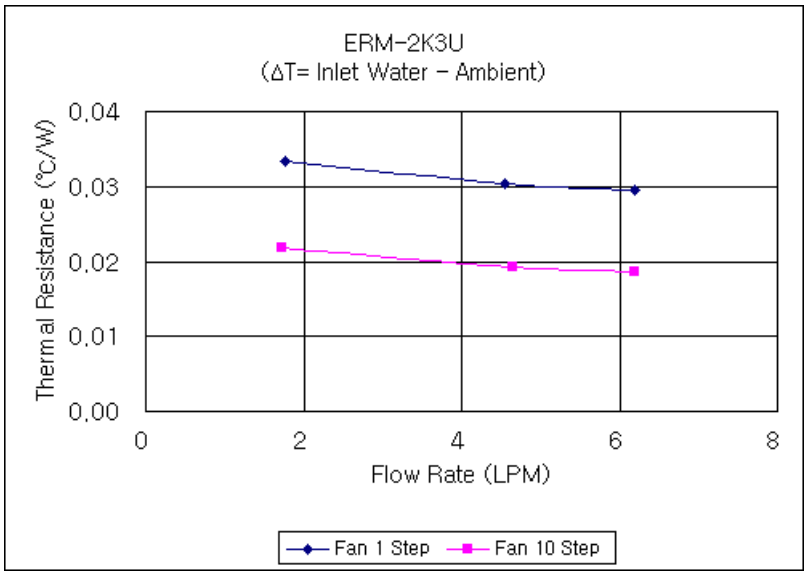
ERM-2K3U
(ΔT= Inlet Water - Ambient)
Thermal Resistance (℃/W)
0.04
0.03
0.02
0.01
0.00
0
2
4
6
8
Flow Rate (LPM)
Fan 1 Step
Fan 10 Step

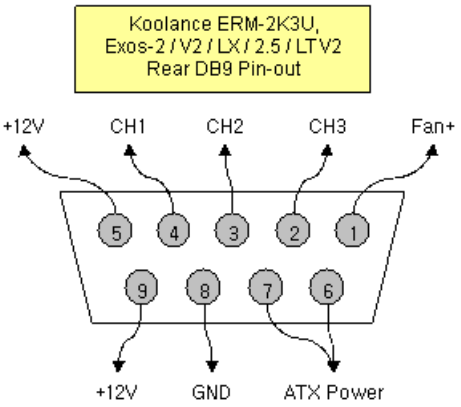
Koolance ERM-2K3U,
Exos-2 / V2 / LX / 2.5 / LTV2
Rear DB9 Pin-out
+12V
CH1
CH2
CH3
Fan+
5
4
3
2
1
9
8
7
6
+12V
GND
ATX Power

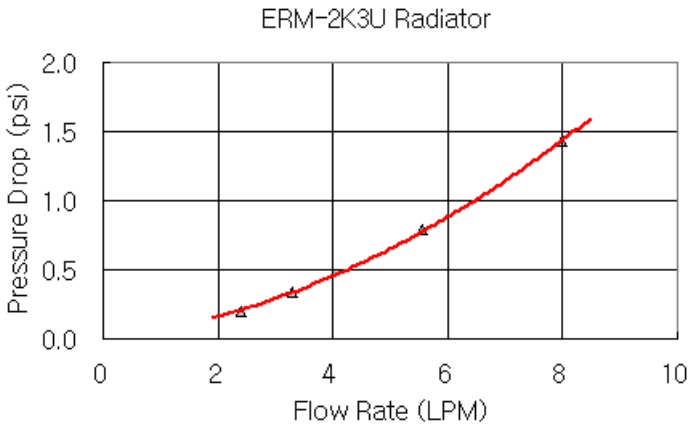
ERM-2K3U Radiator
Pressure Drop (psi)
2.0
1.5
1.0
0.5
0.0
0
2
4
6
8
10
Flow Rate (LPM)

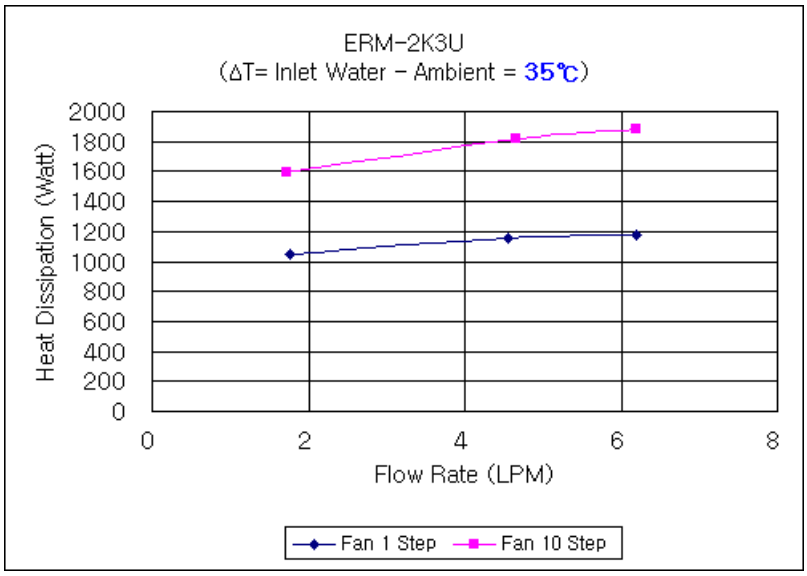
ERM-2K3U
(ΔT= Inlet Water - Ambient = 35℃)
Heat Dissipation (Watt)
2000
1800
1600
1400
1200
1000
800
600
400
200
0
0
2
4
6
8
Flow Rate (LPM)
Fan 1 Step
Fan 10 Step