www.koolance.com

Specifications Sheet

Generated: 2026-11-20

P/N: EX2-750SL-V2

EX2-750SL-V2 (Exos-2 V2) Liquid Cooling System, Silver



The Exos-2 returns with significantly improved flow rate and control features. "V2" adds a 7L/min (1.85 gal/min), 2.6m (8.5ft) head pump, pump speed control, and rear G 1/4in fitting sockets.

The Exos-2 is available in black or silver aluminum, both integrating a 700W cooling system with a dual 120mm fan radiator. Like previous Exos, the system will connect with any PC through a standard rear card slot.

- Radiator fan speeds adjust automatically, or with 10 manual levels
- Manual pump speed adjustment
- Variable temperature alarms on 3 independent sensors
- Auto-cycle or static display of all connected temperature sensors
- Variable safety shutdown temperature
- Blue reservoir LED lighting
- Top coolant fill plug
- Adapted power connection - does not require an AC power outlet
- Optional attachment strap for systems "on the go"

General	
Weight	13.15 lb (5.96 kg)
Cooling Systems	
Display Type	LED
Fans	2 x 120mm (180CFM)
Max Flow Rate (10-13mm ID)	PMP-300 @ 12V
Power Source	12 VDC
Radiator	Aluminum
Temperature Sensors	50K Thermistors

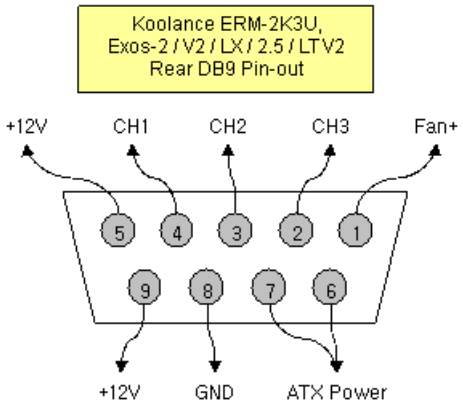
Koolance ERM-2K3U,
Exos-2 / V2 / LX / 2.5 / LTV2
Rear DB9 Pin-out
+12V
CH1
CH2
CH3
Fan+
5
4
3
2
1
9
8
7
6
+12V
GND
ATX Power