www.koolance.com

Specifications Sheet

Generated: 2026-11-28

P/N: EXC-800

EXC-800 Portable 800W Recirculating Liquid Chiller, 110VAC /60Hz (Rev.1.7)



(NOTE: Rev.1.7 of this product has changed the rear fitting threads from G 1/4 BSPP to NPT 1/4in.)

Koolance's EXC-800 is a portable recirculating liquid chiller rated at 800W, or 2730 BTU/hr (@25°C liquid & ambient). Chiller control is based on one of four configurable temperature set-points, including the option to lock liquid to ambient for avoiding condensation or to an external K-type thermocouple sensor (not included).

Along with temperature and set-point, EXC-800 can report internal coolant flow rate, pump RPM, and condenser fan RPM on a customizable 2-line OLED display. An adjustable relay trigger output on the rear of the unit is available based on temperature.

- Cooling capacity: 800W (2730BTU/hr) @ 25°C liquid/ambient
- Temperature options: liquid set-point (1 to 50°C), external thermocouple set-point (1 to 149°C), liquid and ambient delta-T (-50 to 50°C), external thermocouple and ambient delta-T (-50 to 50°C); toggle °C/°F
- Pump: 10 manual levels, up to 11LPM (2.9 GPM)
- Select only values you want displayed on the front 2-line OLED display (fixed or rotating)
- Show pump impeller speed in RPM
- Show coolant flow rate in LPM/GPM
- Show condenser fan speed in RPM
- Adjust audio alarm based on temperature
- Relay trigger can be configured as NO or NC and adjusted based on temperature
- Refrigerant: R-134a
- Power input: 110VAC, 60Hz
- Maximum power consumption @ ambient (approximate): 450W @ 25°C, 650W @ 35°C
- Designed for an operational temperature range of 0-40°C (ambient and liquid)
- Reservoir capacity: 3 liters
- NPT 1/4in threads on back for fittings

NOTE: Requires 110VAC, 60Hz input power. Keep unit upright at all times, and for at least 24 hours before applying power to ensure sufficient oil reaches the compressor.

General	
Weight	47.20 lb (21.41 kg)
Fitting Thread	NPT 1/4in
Max Pressure Tolerance @ 25°C	2kgf/cm2 (28.5psi)
Max Temperature Tolerance	40°C (104°F)
Noise (dBA)	44-53
Cooling Systems	
Cooling Capacity	800W (2730BTU/hr) @ 25°C liquid & ambient (0°C dT)
Display Type	OLED

General	
Max Flow Rate (10-13mm ID)	11LPM (2.9 GPM)
Max Power Consumption	450W @25°C, 650W @35°C
Power Source	110 VAC, 60Hz
Temperature Sensors	Liquid & One K-Type Thermocouple (optional)
Temperature Stability	+/-1ºC

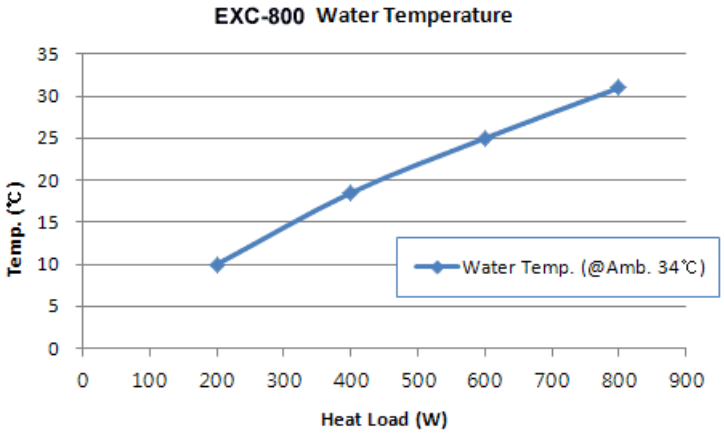

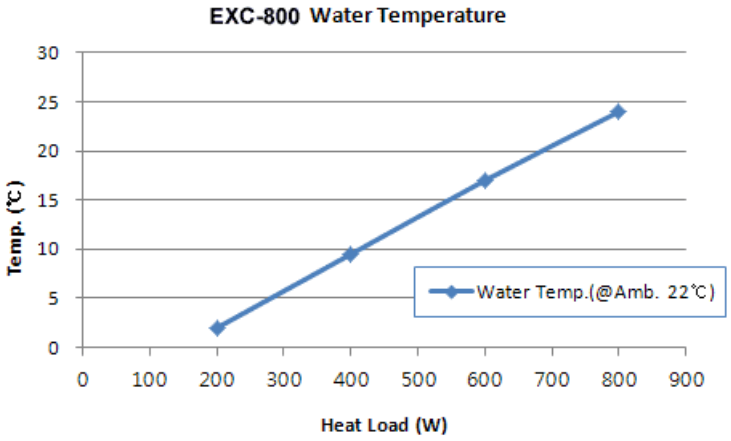

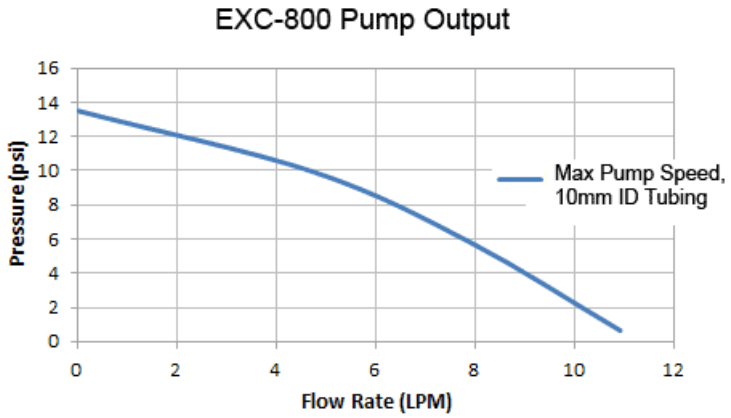

File

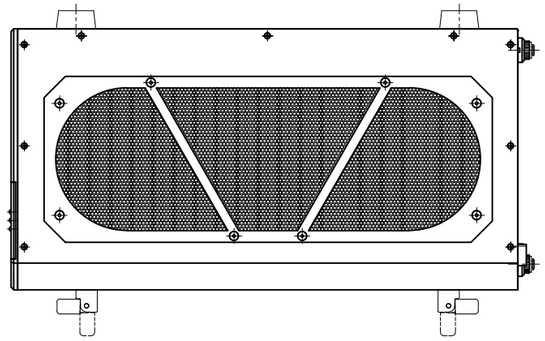

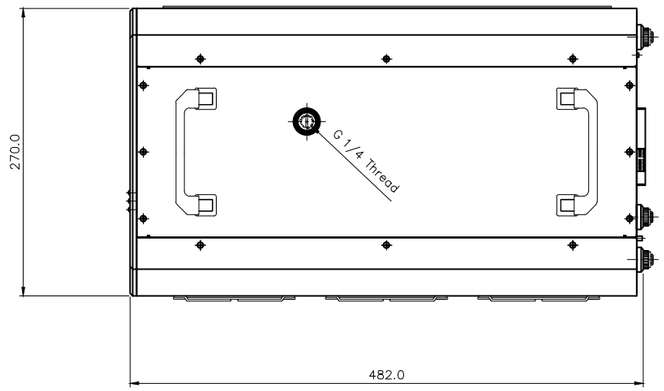

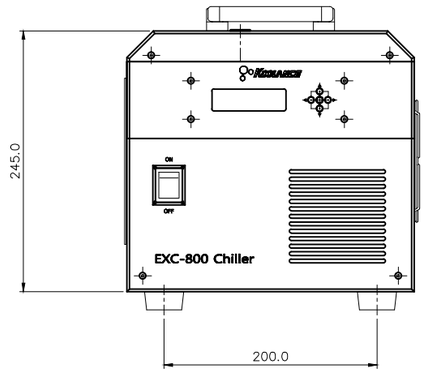

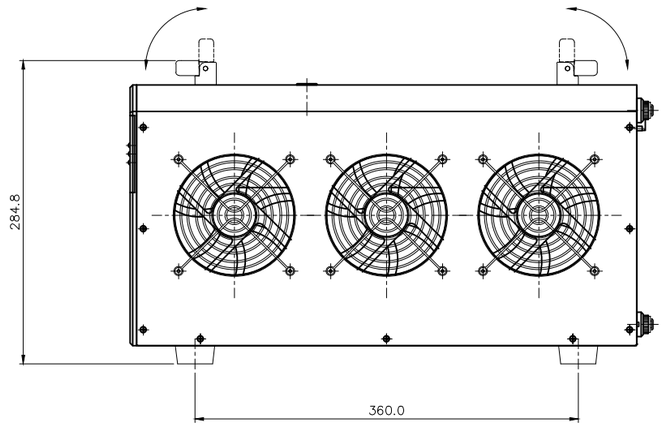

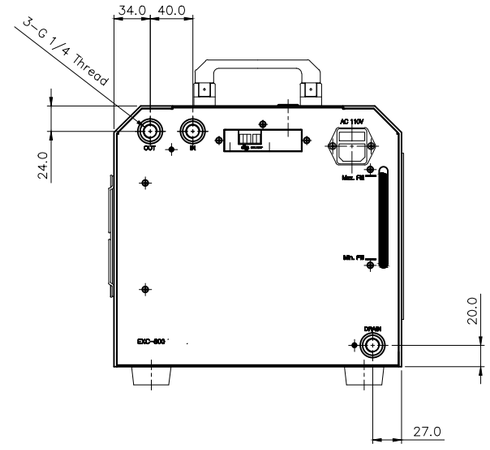

NO.	DESCRIPTION	MATER'L	QUANTITY	REMARKS
KOOLANCE INC.		UNIT MM	ITEM EXC-800	
	BY / BY / BY / APPRO BY	SCALE N/S	TITLE Ass'y	
DATE		3RD ANGLE		
	S.J.LEE	CODE NO.	DWG. NO.	PAGE