www.koolance.com

Specifications Sheet

Generated: 2026-11-18

P/N: EXT-400SL-V2

EXT-400SL-V2 (Exos-LT V2) Liquid Cooling System, Silver [06mm, 1/4in ID]



The Exos-LT (Lite) is a special limited-edition version of the Koolance Exos.

At just over 4 pounds (1.9kg), the Exos-LT is the lightest and most compact external cooling system by Koolance. Like all Exos systems, it will connect with any PC through a standard rear card slot. Available in black or silver anodized aluminum.

- Radiator fan speeds adjust automatically, or with 10 manual levels
- Variable temperature alarm and shutdown
- Designed for 1/4in (6mm) ID tubing
- Top coolant fill plug
- Adapted power connection - does not require an AC power outlet
- Dual 80mm radiator fans
- Optional attachment strap for systems "on the go"

General	
Weight	10.00 lb (4.54 kg)
Cooling Systems	
Display Type	LED
Fans	2 x 80mm (84CFM)
Max Flow Rate (10-13mm ID)	R-PMP01
Power Source	12 VDC
Radiator	Aluminum
Temperature Sensors	50K Thermistors

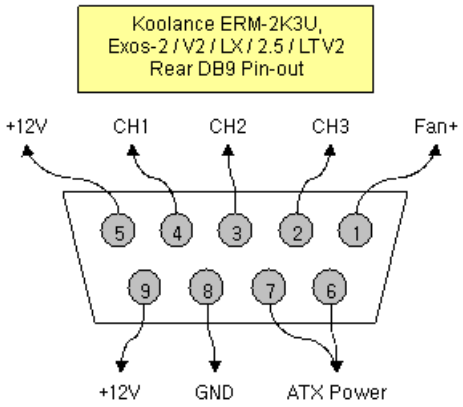
Koolance ERM-2K3U,
Exos-2 / V2 / LX / 2.5 / LTV2
Rear DB9 Pin-out
+12V
CH1
CH2
CH3
Fan+
5
4
3
2
1
9
8
7
6
+12V
GND
ATX Power