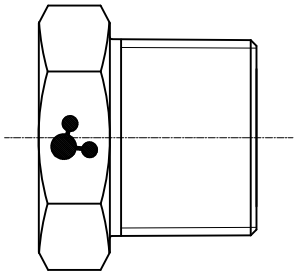

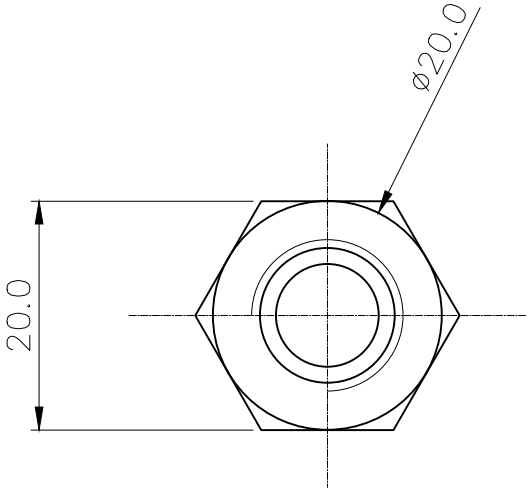

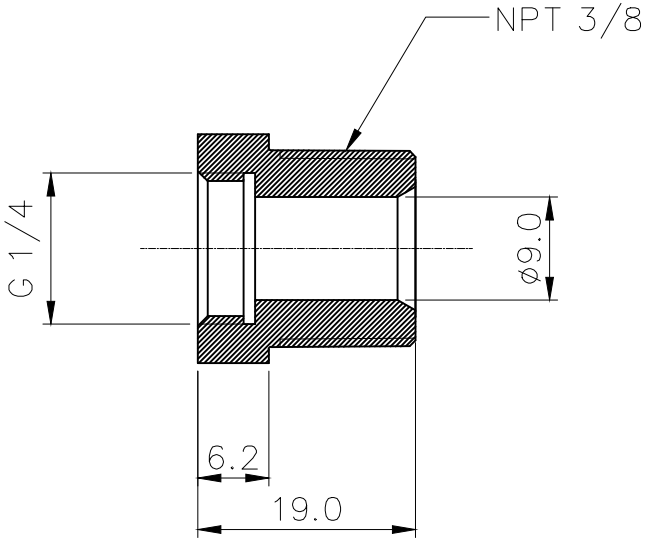

NO.	DESCRIPTION	MATER'L	QUANTITY	REMARKS

KOOLANCE

	BY	BY	BY	APPRD BY
DATE				
	ys.shin			

UNIT	MM
SCALE	N/S
3RD ANGLE	
CODE NO.	

ITEM	ADT-N38M-G14F-SS
TITLE	M-F Type (NPT3/8-G1/4)
DWG. NO.	–
PAGE	

REV	DATE	CONTENTS	REVD BY	CHKD BY	APPD BY

REVISION

File