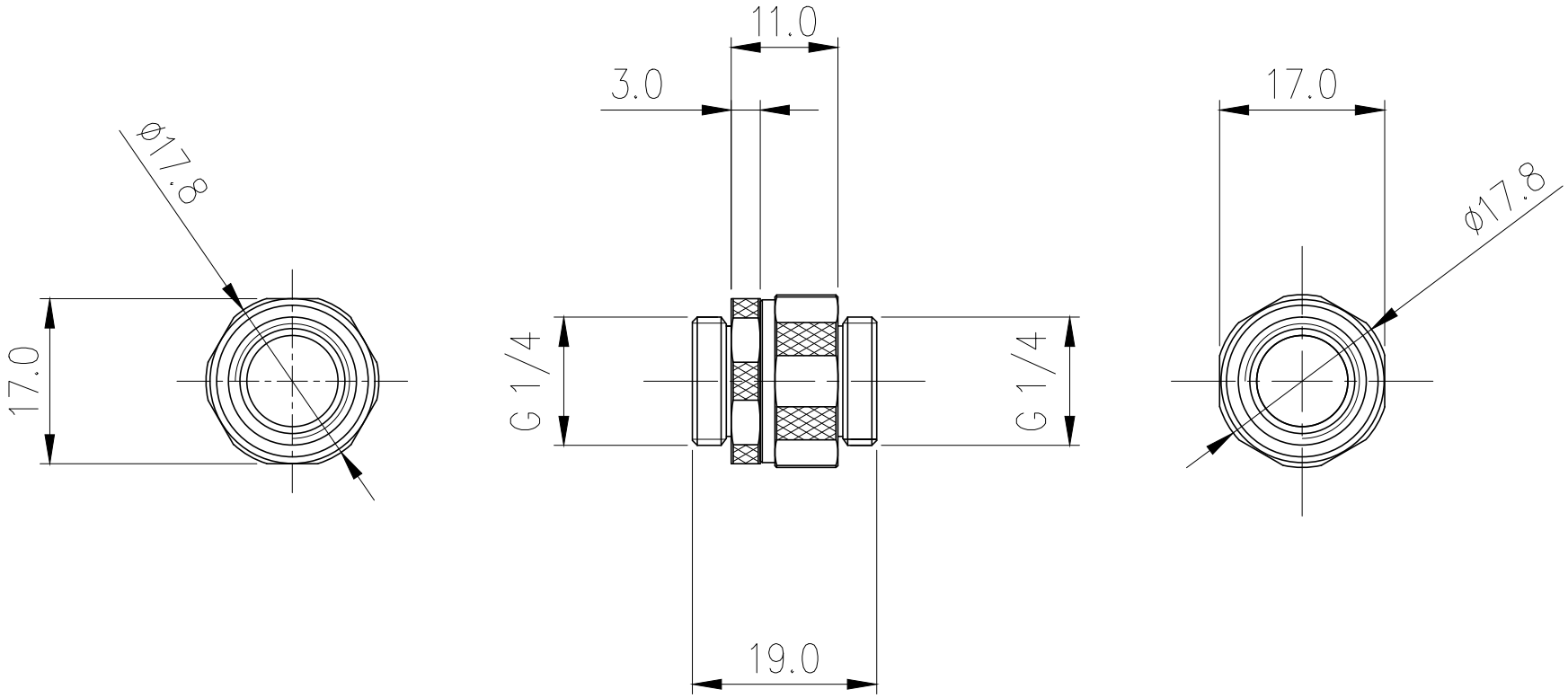

NO.	DESCRIPTION	MATER'L	QUANTITY	REMARKS

KOOLANCE INC.

UNIT	MM	APPAR	ADT-SMM(-BK)		
SCALE	N/S	TITLE	Ass'y		
3RD ANGLE					
REF. NO.		DWG. NO.			

	BY	BY	BY	APPRD BY
DATE				
	S.J.LEE			

REV	DATE	CONTENTS	REVD BY	CHKD BY	APPD BY

REVISION

File