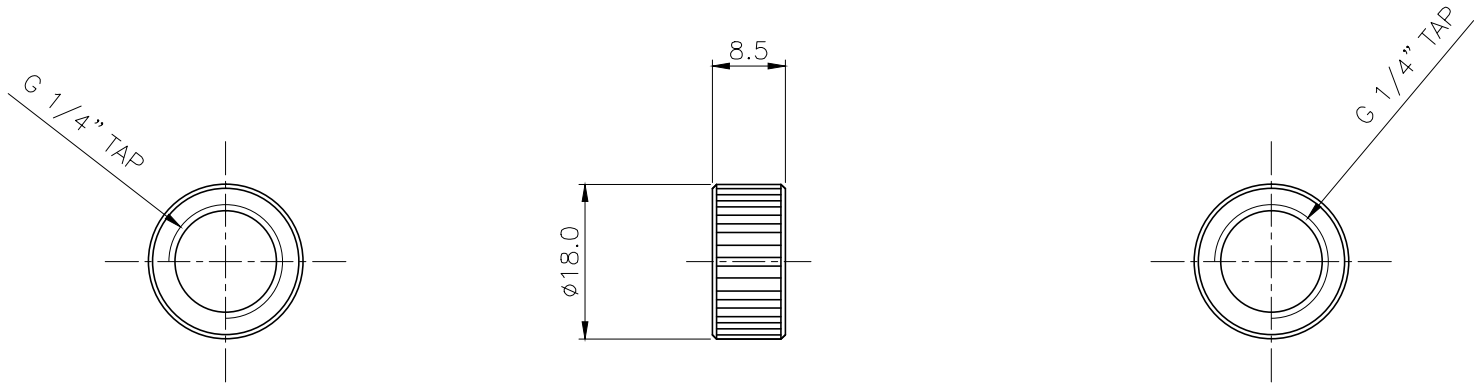

NO.	DESCRIPTION				MATER'L	QUANTITY	REMARKS
KOOLANCE					UNIT MM	APPAR ADT-XFF	
	BY	BY	BY	APPRD BY	SCALE N/S	TITLE Ass'y	
DATE					3RD ANGLE		
04/06/2017	S.J.LEE				CODE NO.	DWG. NO.	

File