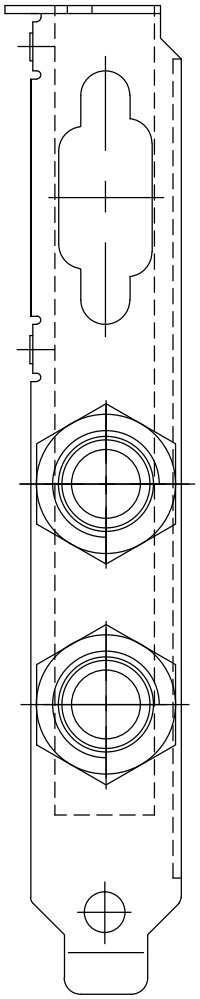

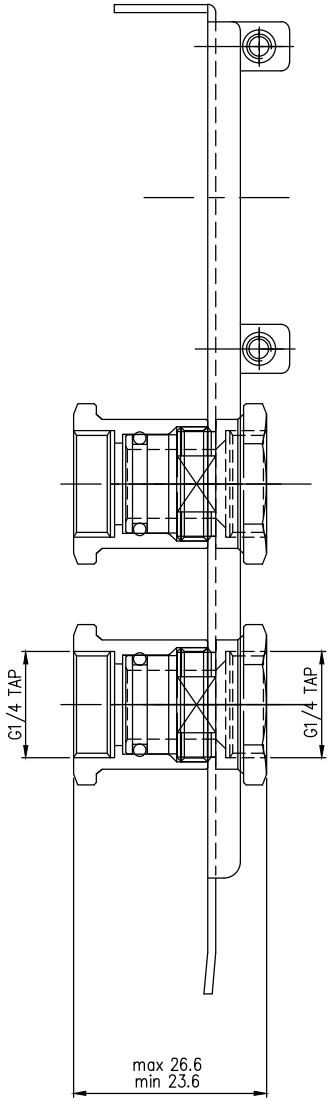

REV	DATE	CONTENTS	APPD BY

REVISION

NO.	DESCRIPTION	MATER'L	QUANTITY	REMARKS
KOOLANCE INC.		UNIT MM	PART NO. BKT-PCI-G	
	BY / BY / BY / APPRD BY	SCALE N/S	TITLE	
DATE		3RD ANGLE		
	song	CODE NO.	ITEM	PAGE

File