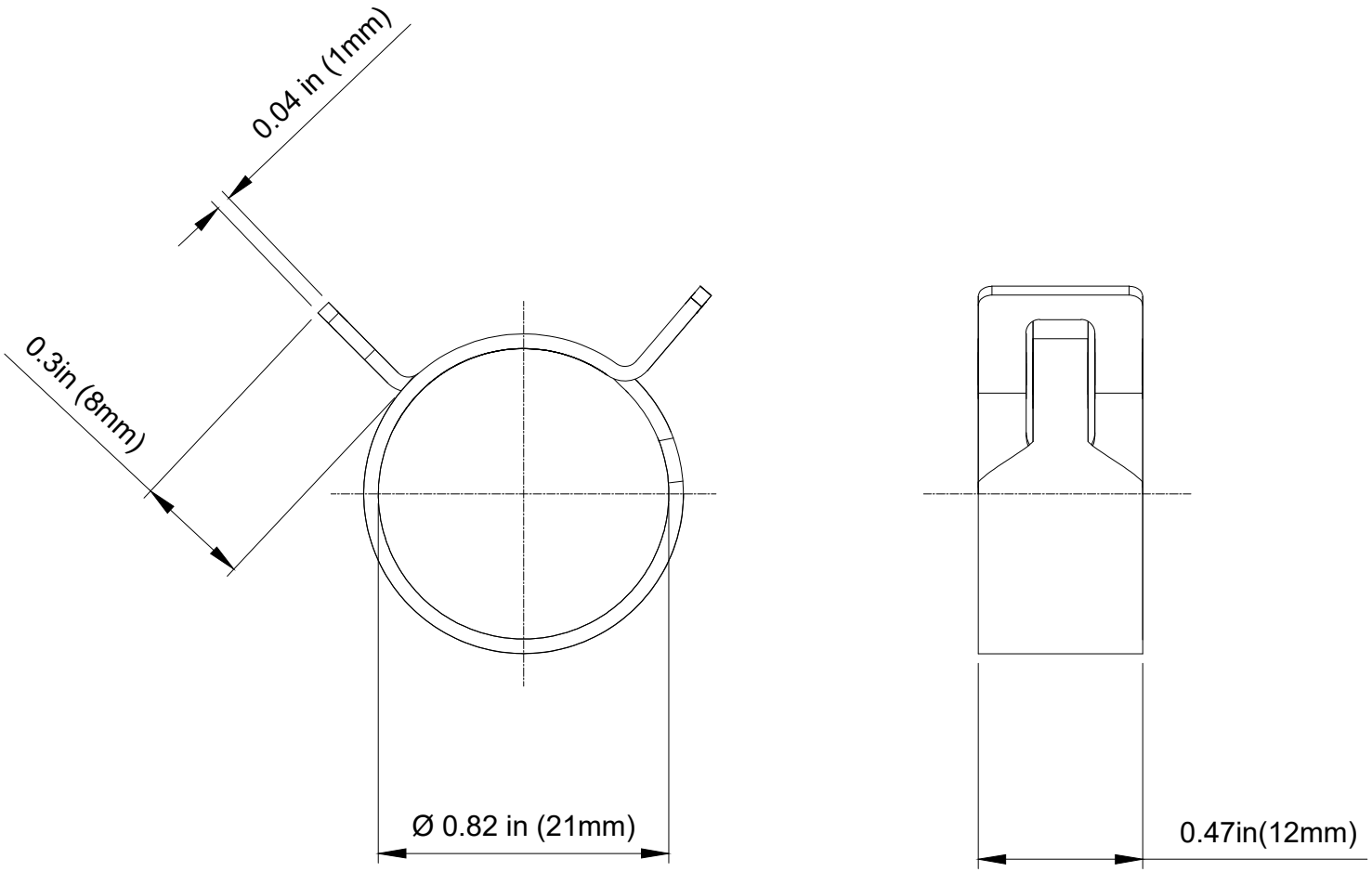

Nickel plated steel

NO.	DESCRIPTION				MATER'L		QUANTITY	REMARKS
KOOLANCE					UNIT	MM	APPAR	
	BY	BY	BY	APPRD BY	SCALE	N/S	TITLE CLM-22-xx	
DATE					3RD ANGLE			
2026.05.11	SK.An				CODE NO.		DWG. NO.	