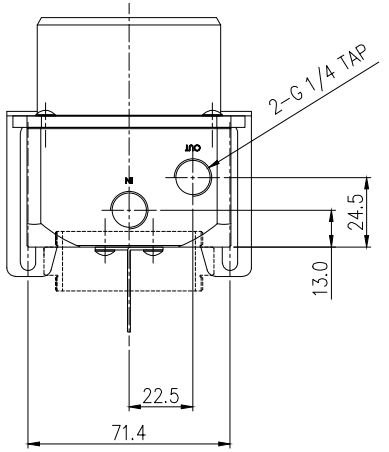

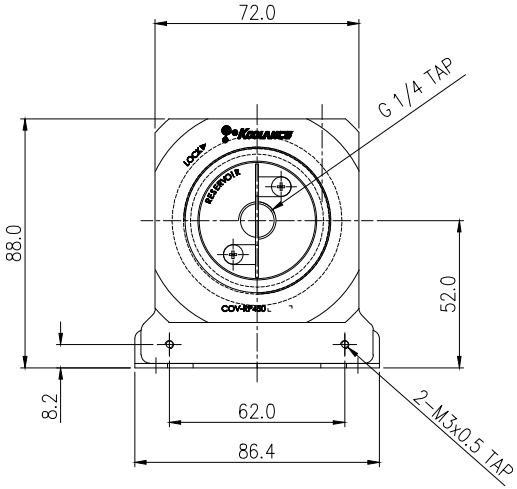

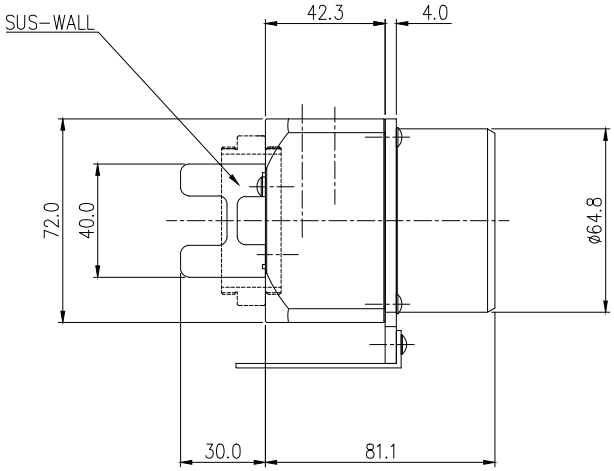

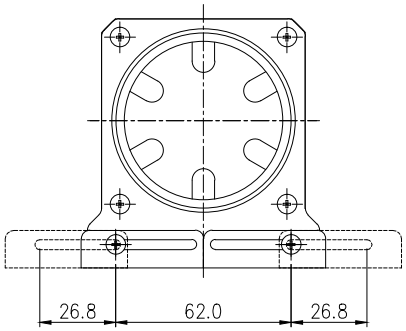

REV	DATE	CONTENTS	REVD BY	CHKD BY	APPD BY
△					

REVISION

NO.	DESCRIPTION	MATER'L	QUANTITY	REMARKS
KOOLANCE INC.		UNIT MM	APPAR COV-RP450	
	BY BY BY APPRO BY	SCALE N/S	TITLE SUS-wall version Ass'y	
DATE		3RD ANGLE		
	S.J.LEE	REF. NO.	DWG. NO.	

File