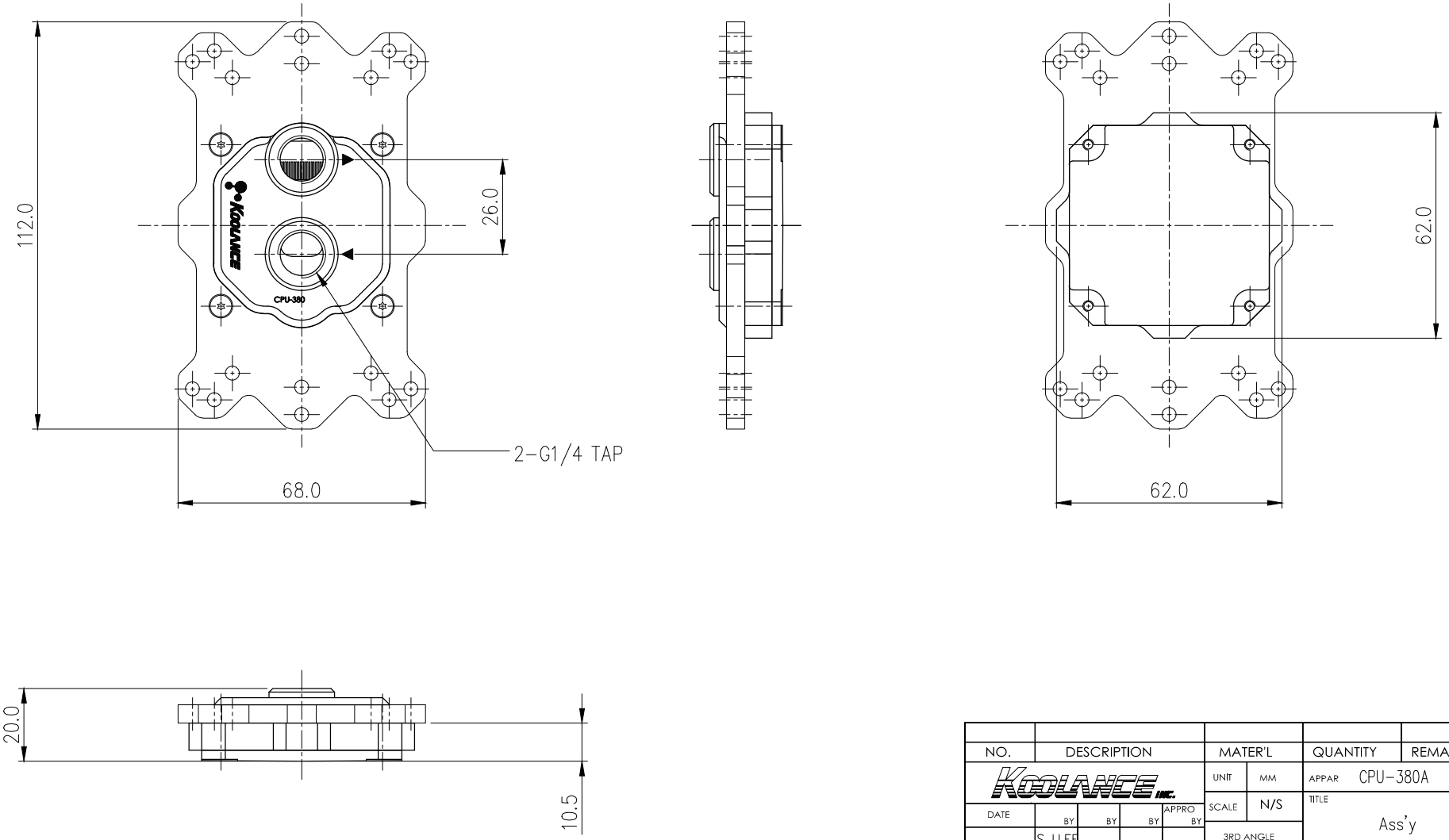

NO.	DESCRIPTION	MATER'L	QUANTITY	REMARKS
KOOLANCE INC.		UNIT MM	APPAR CPU-380A	
DATE	BY / BY / BY / APPRO BY	SCALE N/S	TITLE Ass'y	
	S.J.LEE	3RD ANGLE		
		REF. NO.	DWG. NO.	

File