File

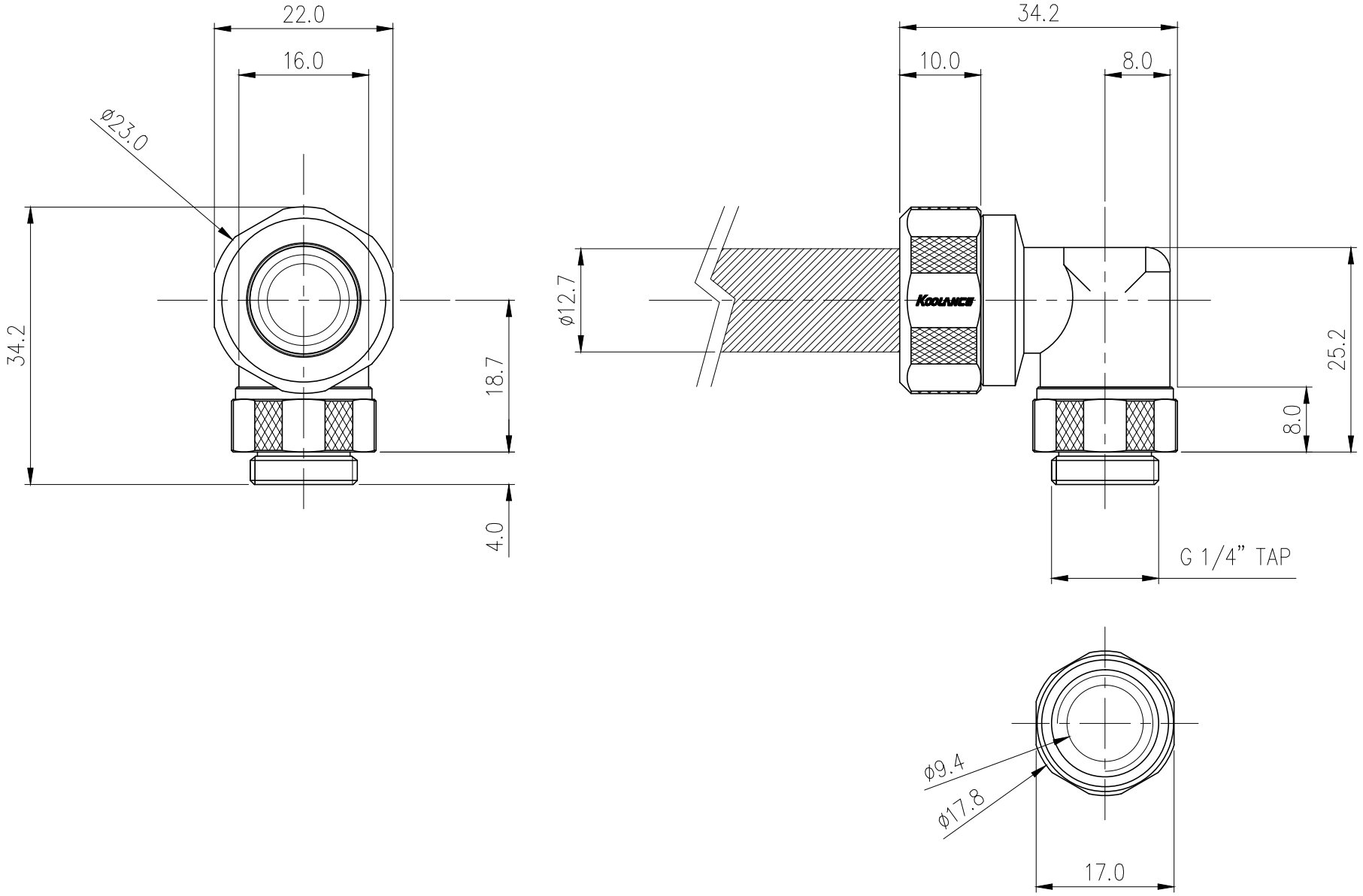

⚠					
⚠					
REV	DATE	CONTENTS	REVD BY	CHKD BY	APPD BY
REVISION					

NO.	DESCRIPTION			MATER'L	QUANTITY	REMARKS
KOOLANCE				UNIT MM	APPAR FIT-L13RT(-BK)	
	BY	BY	BY	APPRO BY	SCALE N/S	TITLE Ass'y
DATE					3RD ANGLE	
	S.J.LEE				CODE NO.	DWG. NO.