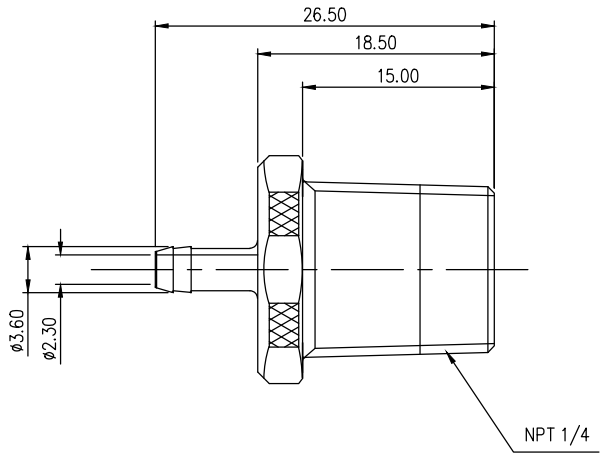

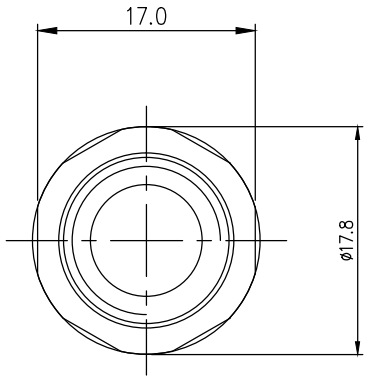

REV	DATE	CONTENTS	APPD BY
⚠			

REVISION

NO.	DESCRIPTION				MATER'L	QUANTITY	REMARKS
KOOLANCE					UNIT MM	PART NO. FIT-V03N14	
	BY	BY	BY	APPRD BY	SCALE N/S	TITLE NPT 1/4, 3mm (1/8") ID tubing	
DATE					3RD ANGLE		
2017.03.29	ys.shin				DWG. NO.	ITEM	

File