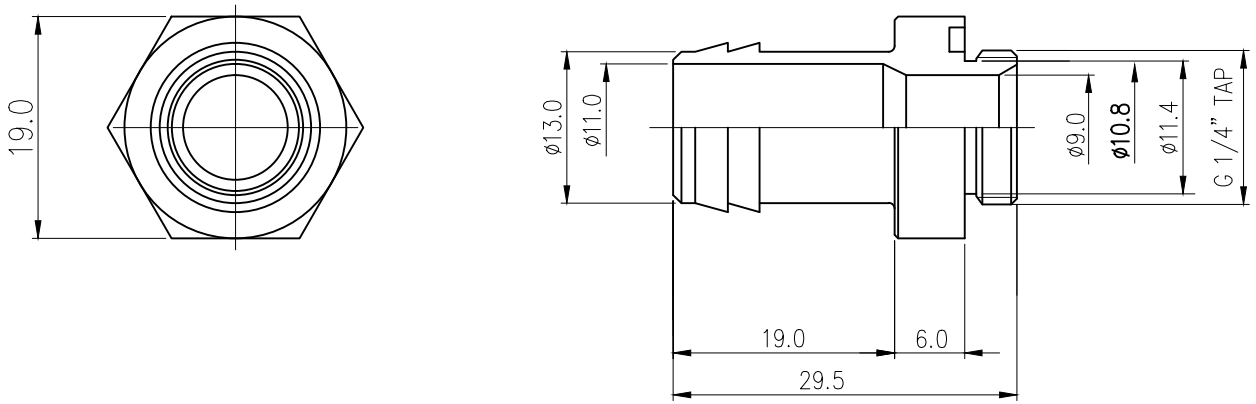

NO.	DESCRIPTION	MATER'L	QUANTITY	REMARKS

KOOLANCE INC.

	BY	BY	BY	APPRD BY
DATE				
	ys.shin			

UNIT	MM	ITEM	FIT-V13B-SS
SCALE	N/S	TITLE	13mm G나사 호스바브 니블
3RD ANGLE			
CODE NO.		DWG. NO.	—
		PAGE	

REV	DATE	CONTENTS	REVD BY	CHKD BY	APPD BY

REVISION

File