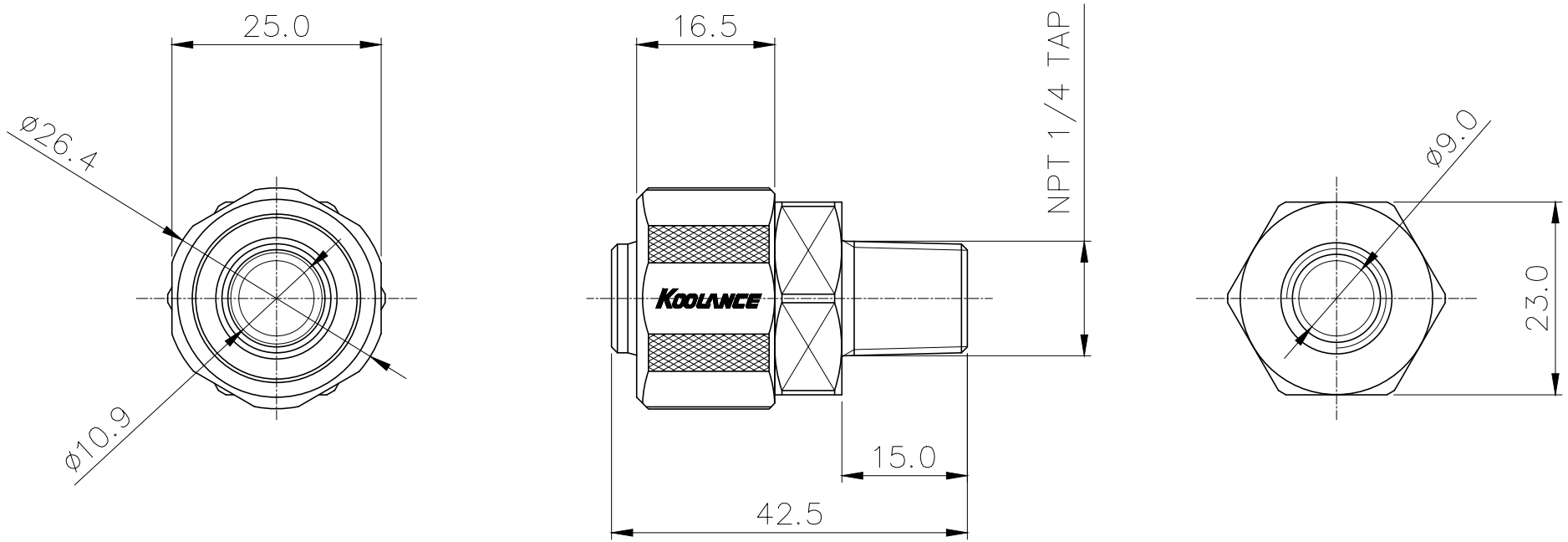

REV	DATE	CONTENTS	REVD BY	CHKD BY	APPD BY

REVISION

NO.	DESCRIPTION				MATER'L	QUANTITY	REMARKS
KOOLANCE INC.					UNIT MM	APPAR FIT-V13X19N14	
	BY	BY	BY	APPRD BY	SCALE N/S	TITLE Ass'y	
DATE					3RD ANGLE		
	S.J.LEE				REF. NO.	DWG. NO.	