File

Screw Type

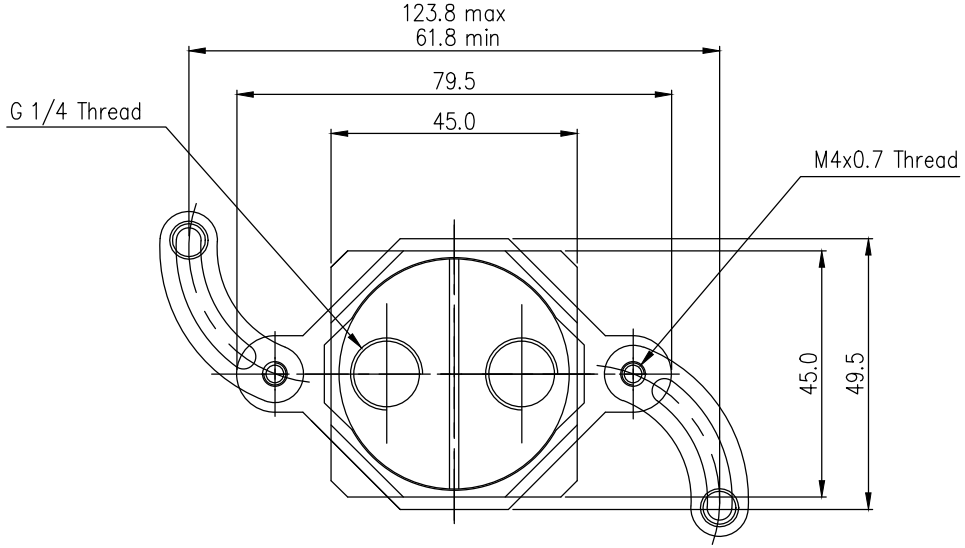

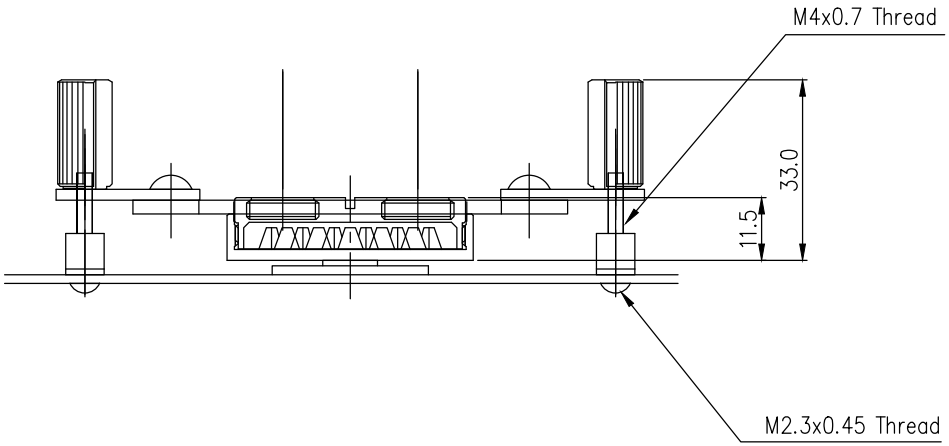

Pin Type

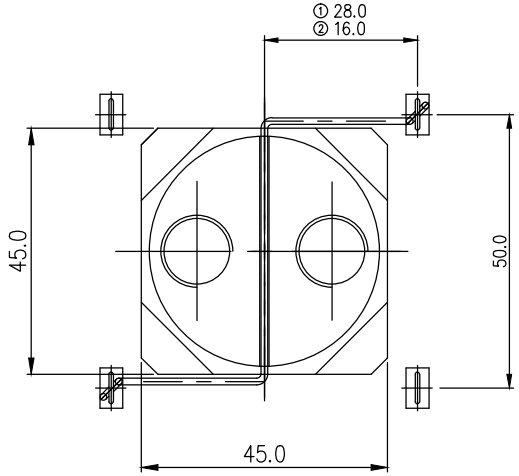

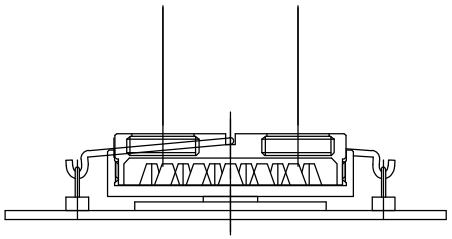

REV	DATE	CONTENTS	REVD BY	CHKD BY	APPD BY
3					
2					
1					

REVISION

NO.	DISCRIPTION	MATER'L	QUANTITY	REMARKS

KOOLANCE INC.

UNIT	MM.INCH	APPAR	GPU-200		
SCALE	1:1	TITLE	Mechanical Dimension		
3RD ANGLE					
REF. NO.		DWG. NO.			

	BY	BY	BY	APPRD BY
DATE				
	AK. SONG			