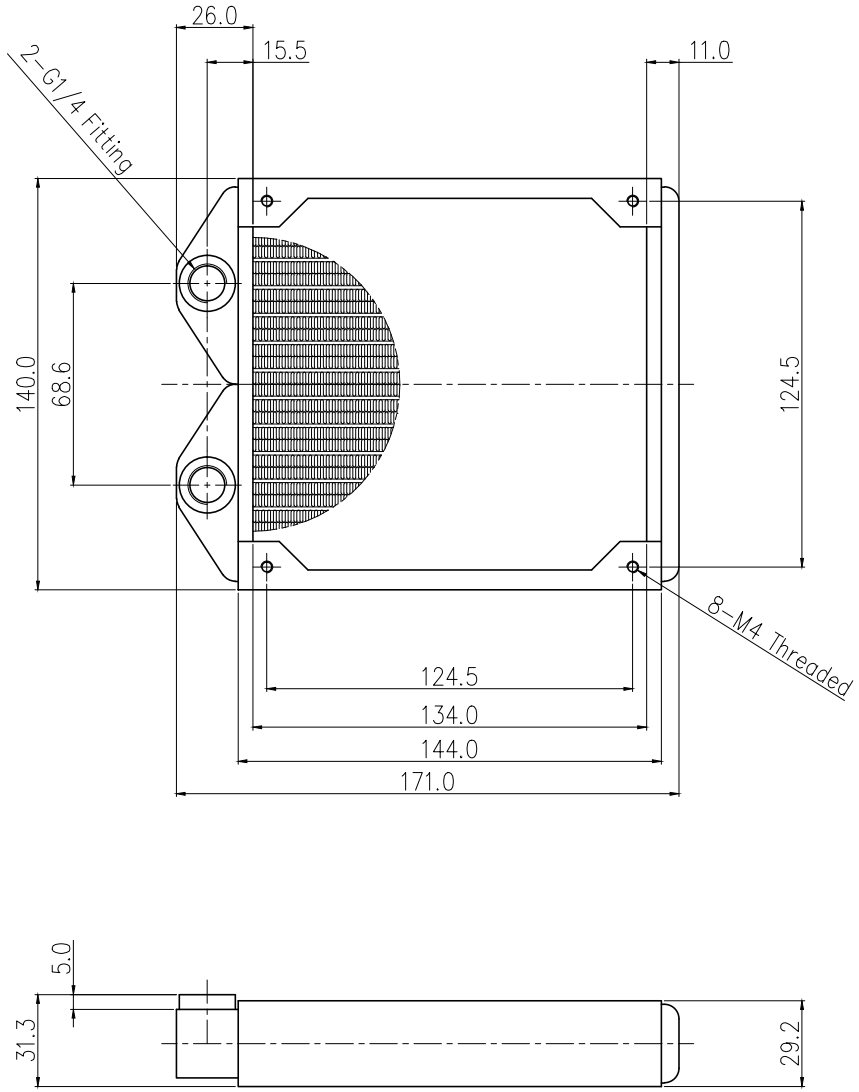

NO.	DESCRIPTION	MATER'L	QUANTITY	REMARKS

KOOLANCE®

UNIT	MM	ITEM	HX-CU1401V		
SCALE	N/S	TITLE	Ass'y		
3RD ANGLE					
CODE NO.		DWG. NO.		PAGE	

	BY	BY	BY	APPRD BY
DATE				
	S.J.LEE			

REV	DATE	CONTENTS	REVD BY	CHKD BY	APPD BY

REVISION

File