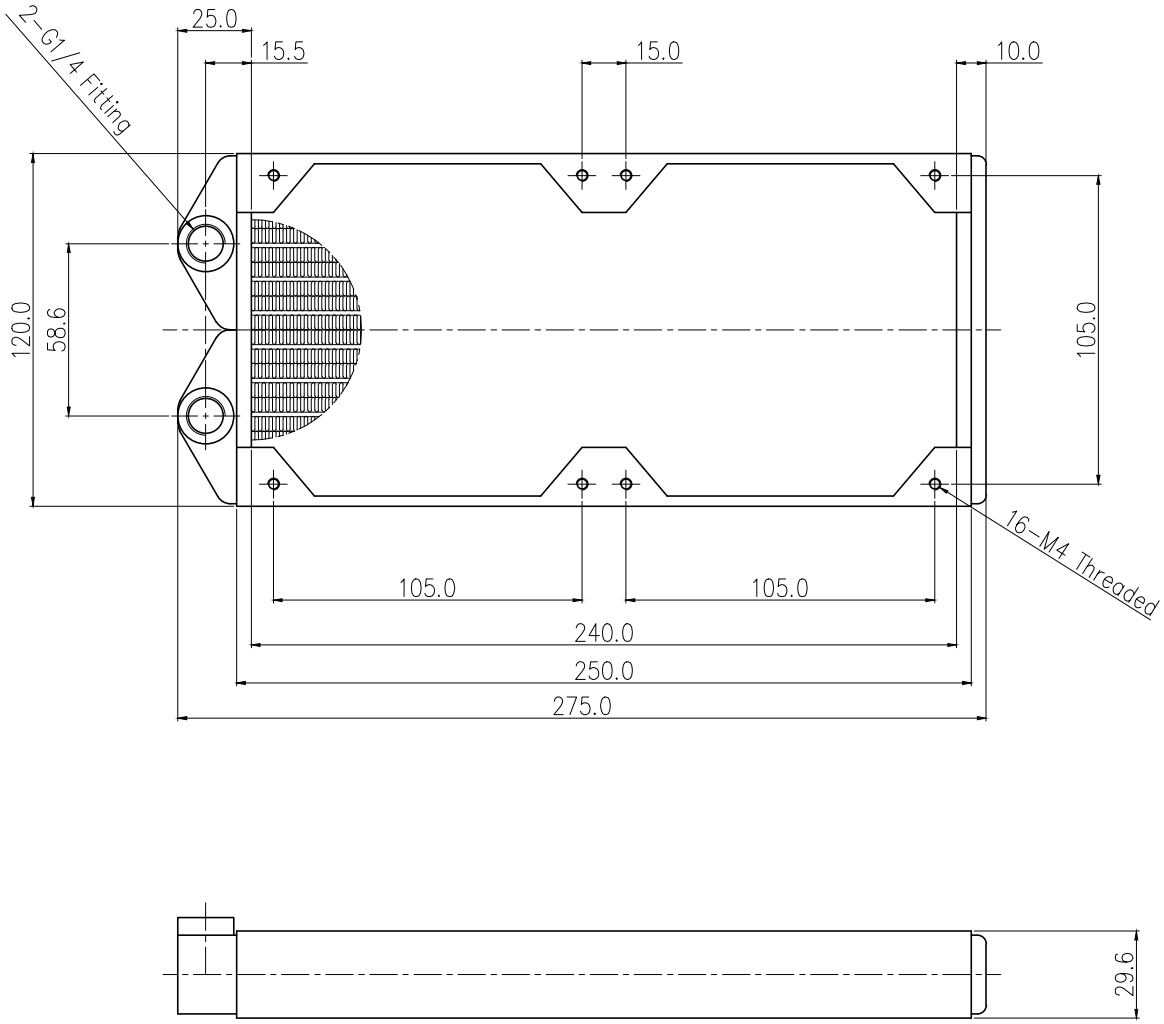

NO.	DESCRIPTION	MATER'L	QUANTITY	REMARKS
KOOLANCE		UNIT MM	ITEM HX-CU720V	
	BY / BY / BY / APPRD BY	SCALE N/S	TITLE Ass'y	
DATE		3RD ANGLE		
	S.J.LEE	CODE NO.	DWG. NO.	PAGE

REV	DATE	CONTENTS	REVD BY	CHKD BY	APPD BY

REVISION

File