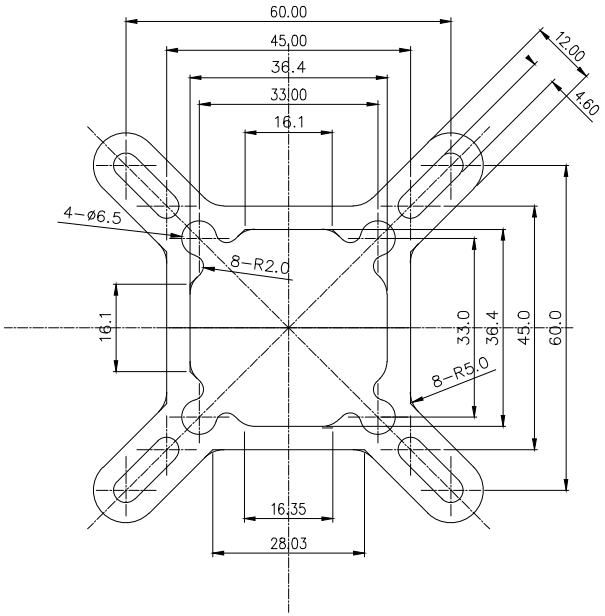

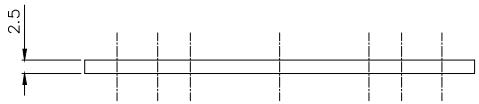

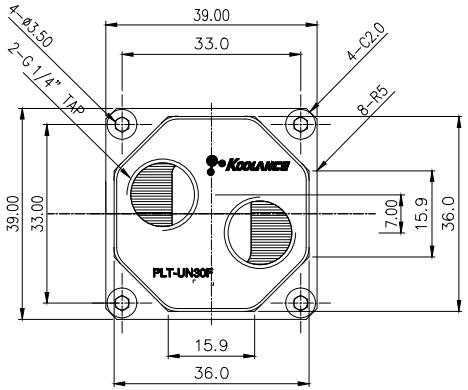

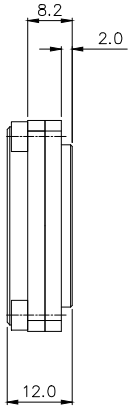

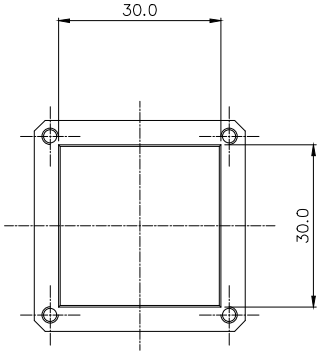

REV	DATE	CONTENTS	REVD BY	CHKD BY	APPD BY

REVISION

NO.	DESCRIPTION				MATER'L	QUANTITY	REMARKS
KOOLANCE					UNIT MM	ITEM PLT-UN30F	
	BY	BY	BY	APPRO BY	SCALE N/S	TITLE Ass'y	
DATE					3RD ANGLE		
	SK.AN				CODE NO.	DWG. NO.	PAGE