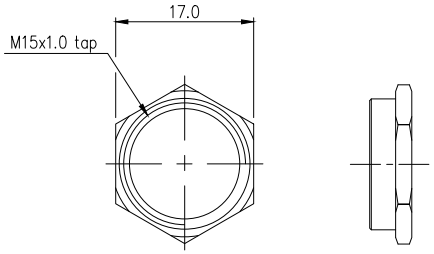

NUT

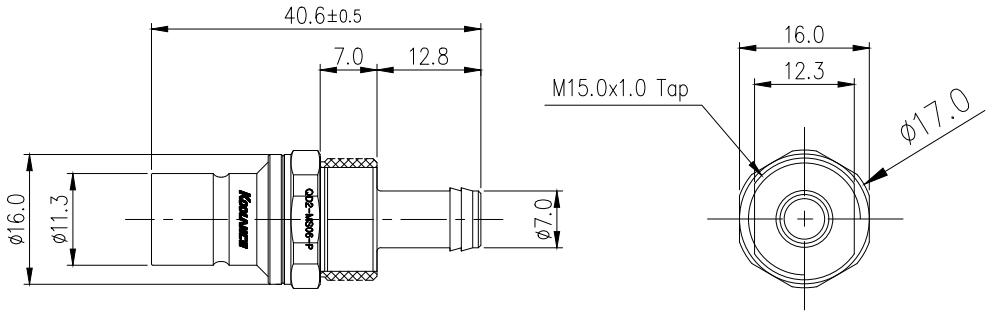

REV	DATE	CONTENTS	APPD BY

REVISION

NO.	DESCRIPTION				MATER'L	QUANTITY	REMARKS
KOOLANCE					UNIT MM	PART NO. QD2	
	BY	BY	BY	APPRD BY	SCALE N/S	TITLE QD2-MS06-P	
DATE					3RD ANGLE		
		SONG			DWG. NO.	ITEM	