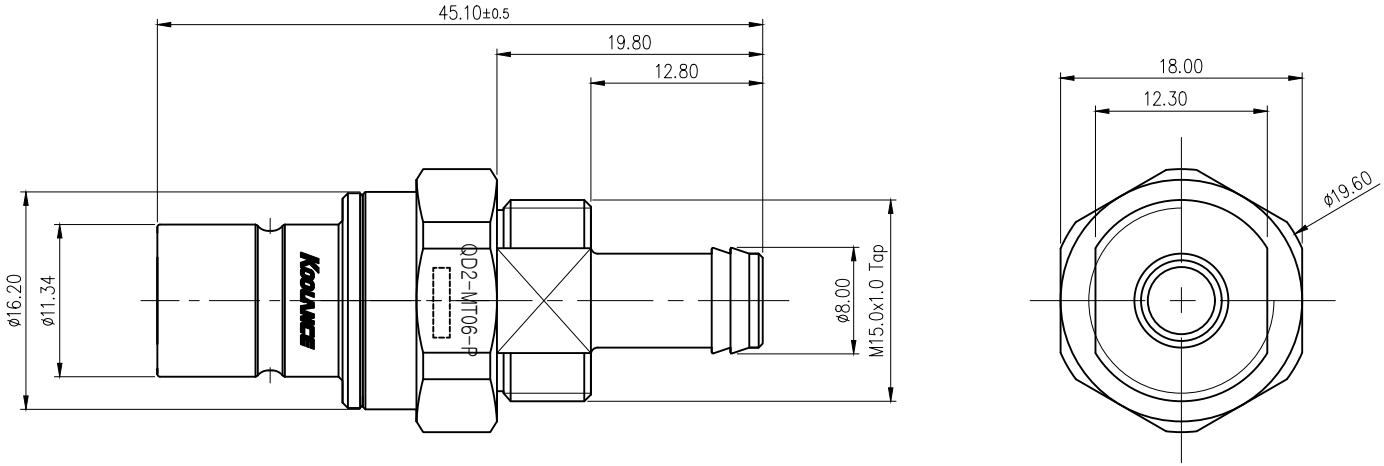

⚠					
REV	DATE	CONTENTS	REVD BY	CHKD BY	APPD BY

REVISION

NO.	DESCRIPTION				MATER'L	QUANTITY	REMARKS
KOOLANCE					UNIT MM	PART NO.	
	BY	BY	BY	APPRD BY	SCALE N/S	TITLE QD2-MT06-P	
DATE					3RD ANGLE		
	SONG				DWG. NO.	ITEM QD2 Press-fit Type	REV.

File