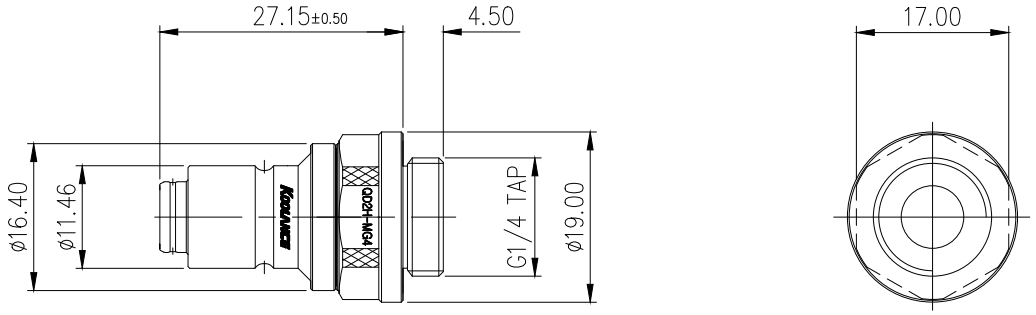

REV	DATE	CONTENTS	APPD BY
REVISION			

NO.	DESCRIPTION	MATER'L	QUANTITY	REMARKS
KOOLANCE		UNIT MM	PART NO. QD2H-MG4	
	BY / BY / BY / APPRD BY	SCALE N/S	TITLE DIMENSION	
DATE		3RD ANGLE		
	song	DWG. NO.	ITEM QD2H	

File