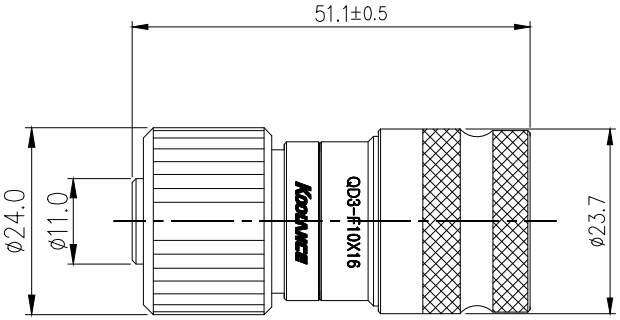

REV	DATE	CONTENTS	REVD BY	CHKD BY	APPD BY

REVISION

NO.	DISCRIPTION	MATER'L	QUANTITY	REMARKS

KOOLANCE INC.

	BY	BY	BY	APPRO BY
DATE				

DECIMAL PLACES	INCHES	MILLIMETRES
.XXX	±.005	±0.1
.XX	±.010	±0.3
.X	±.020	±0.5
ANGULAR DIMENSIONS		
XX°	±0.5°	
XX.X°	±0.1°	
SURFACE ROUGHNESS	SURFACE .63	SURFACE 1.6

UNIT	MM	ITEM	QD3
SCALE	N/S	TITLE	QD3-F10X16
3RD ANGLE			
CODE NO.		DWG. NO.	PAGE