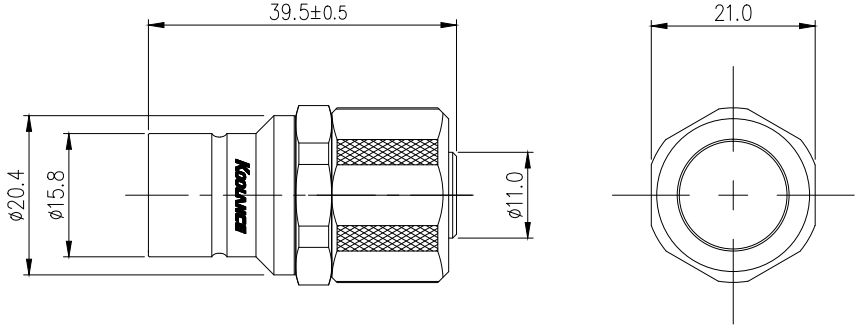

REV	DATE	CONTENTS	APPD BY

REVISION

NO.	DESCRIPTION	MATER'L	QUANTITY	REMARKS
KOOLANCE		UNIT MM	PART NO. QD3	
		SCALE N/S	TITLE QD3-MS10X13 QD3-MS10X13-BK	
	BY / BY / BY / APPRD BY	DECIMAL PLACES 0 : ±0.5 0.X : ±0.3 0.XX : ±0.1		
DATE				
2022.4.7	SONG	DWG. NO.	ITEM	