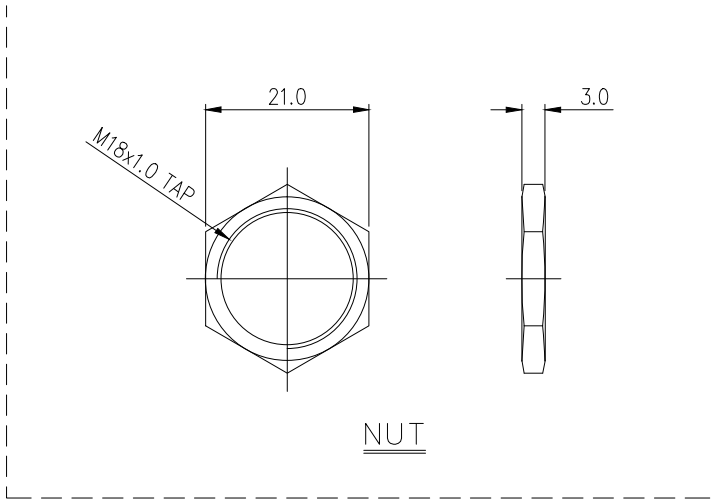


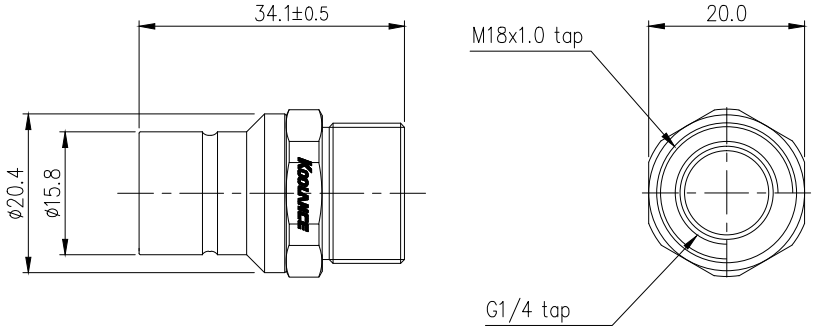


| REV | DATE | CONTENTS | REVD BY | CHKD BY | APPD BY |
|---|---|---|---|---|---|
| | | | | | |
| | | | | | |
| | | | | | |
| | | | | | |

REVISION

| NO. | DISCRIPTION | MATER'L | QUANTITY | REMARKS |
|---|---|---|---|---|

KOOLANCE INC.

| | BY | BY | BY | APPRO BY |
|---|---|---|---|---|
| DATE | | | | |
| | SONG | | | |
| | | | | |

| DECIMAL PLACES | INCHES | MILLIMETRES |
|---|---|---|
| .XXX | ±.005 | ±0.1 |
| .XX | ±.010 | ±0.3 |
| .X | ±.020 | ±0.5 |
| ANGULAR DIMENSIONS | | |
| XX° | ±0.5° | |
| XX.X° | ±0.1° | |
| SURFACE ROUGHNESS | SURFACE .63 | SURFACE 1.6 |

| | |
|---|---|
| UNIT | MM |
| SCALE | N/S |
| 3RD ANGLE | |
| CODE NO. | |

ITEM QD3

TITLE QD3-MSFG4-P
QD3-MSFG4-P-BK

DWG. NO.

PAGE