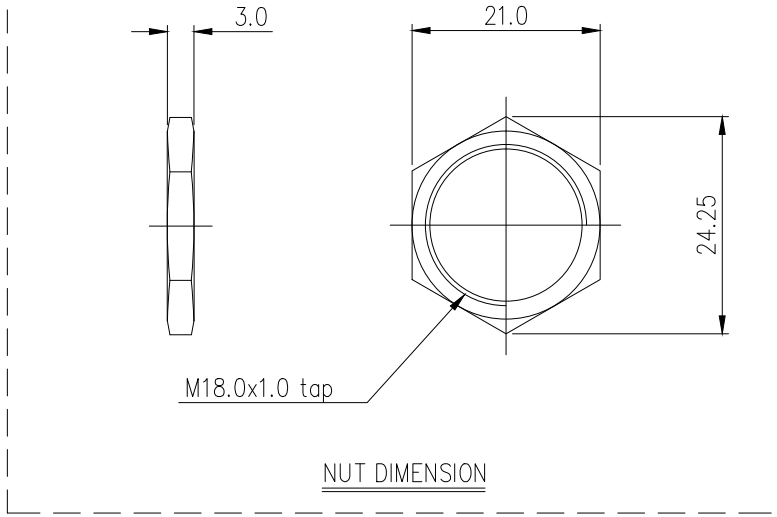


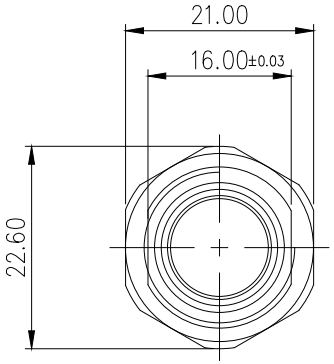


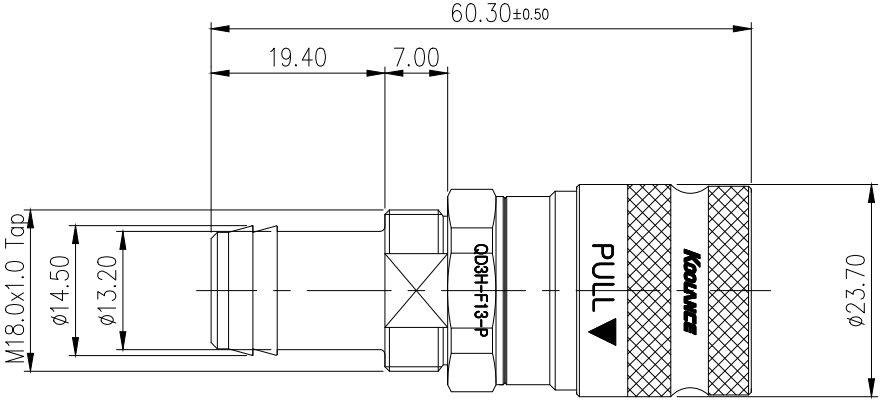


| REV | DATE | CONTENTS | APPD BY |
|---|---|---|---|
| | | | |
| | | | |
| | | | |
| | | | |
| | | | |

REVISION

| NO. | DESCRIPTION | | | | MATER'L | QUANTITY | REMARKS |
|---|---|---|---|---|---|---|---|
| KOOLANCE | | | | | UNIT MM | PART NO. QD3H-F13-P | |
| | BY | BY | BY | APPRD BY | SCALE N/S | TITLE DIMENSION | |
| DATE | | | | | 3RD ANGLE | | |
| | song | | | | DWG. NO. | ITEM QD3H | |