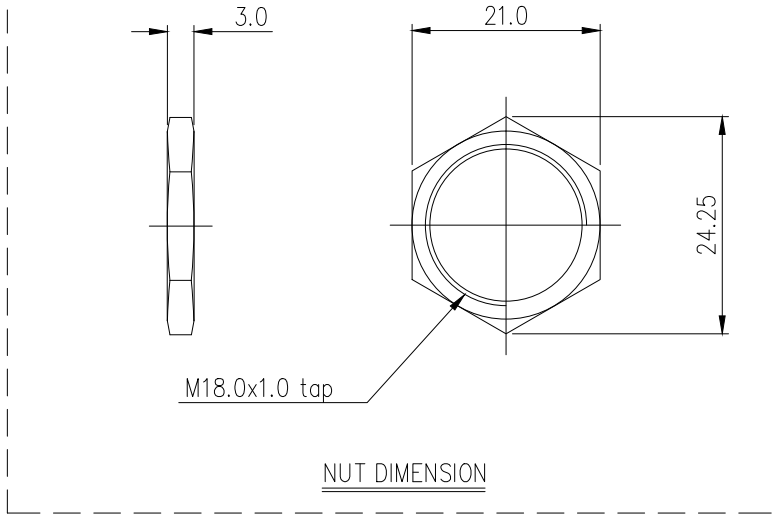

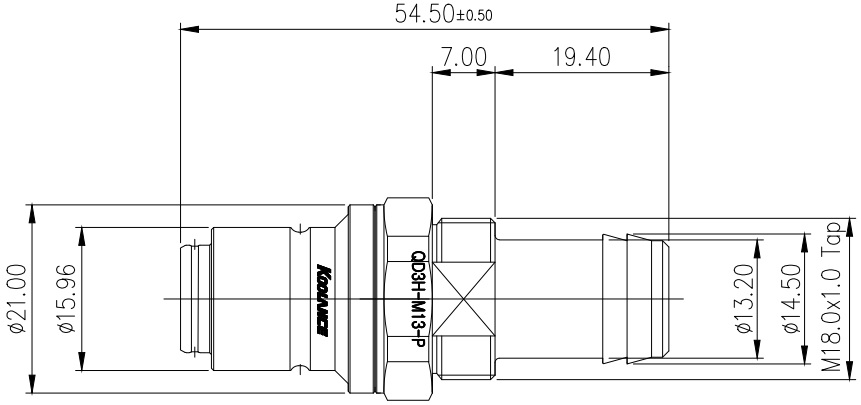

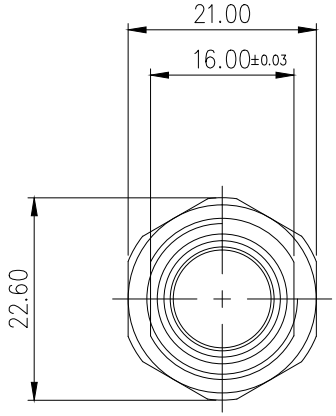

REV	DATE	CONTENTS	APPD BY

REVISION

NO.	DESCRIPTION				MATER'L	QUANTITY	REMARKS
KOOLANCE					UNIT MM	PART NO. QD3H-M13-P	
	BY	BY	BY	APPRD BY	SCALE N/S	TITLE DIMENSION	
DATE					3RD ANGLE		
	song				DWG. NO.	ITEM QD3H	