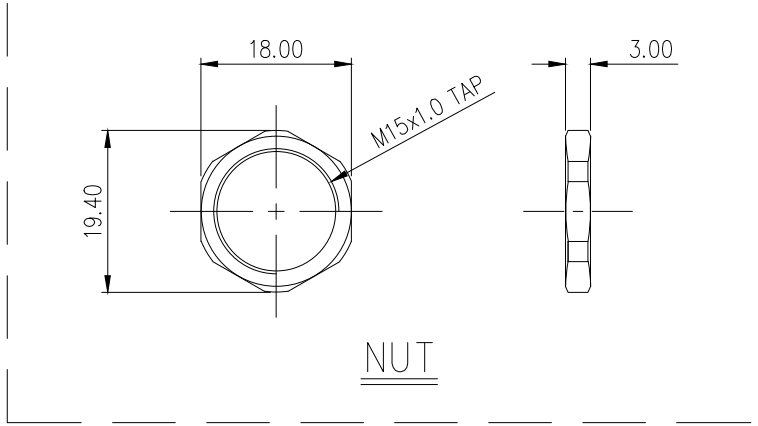

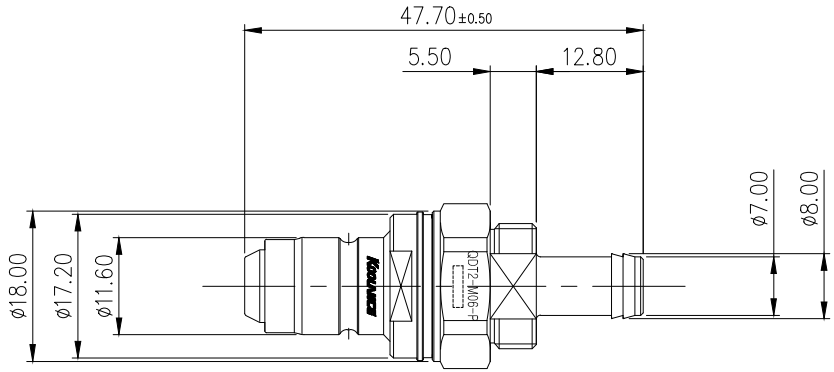

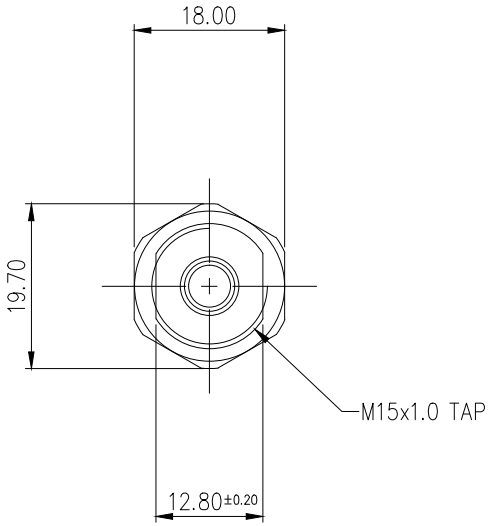

REV	DATE	CONTENTS	APPD BY

REVISION

NO.	DESCRIPTION				MATER'L	QUANTITY	REMARKS
KOOLANCE					UNIT	MM	PART NO. QDT2-M06-P
	BY	BY	BY	APPRD BY	SCALE	N/S	TITLE DIMENSION
DATE					3RD ANGLE		
	S.J.LEE				DWG. NO.		ITEM QDT2

File