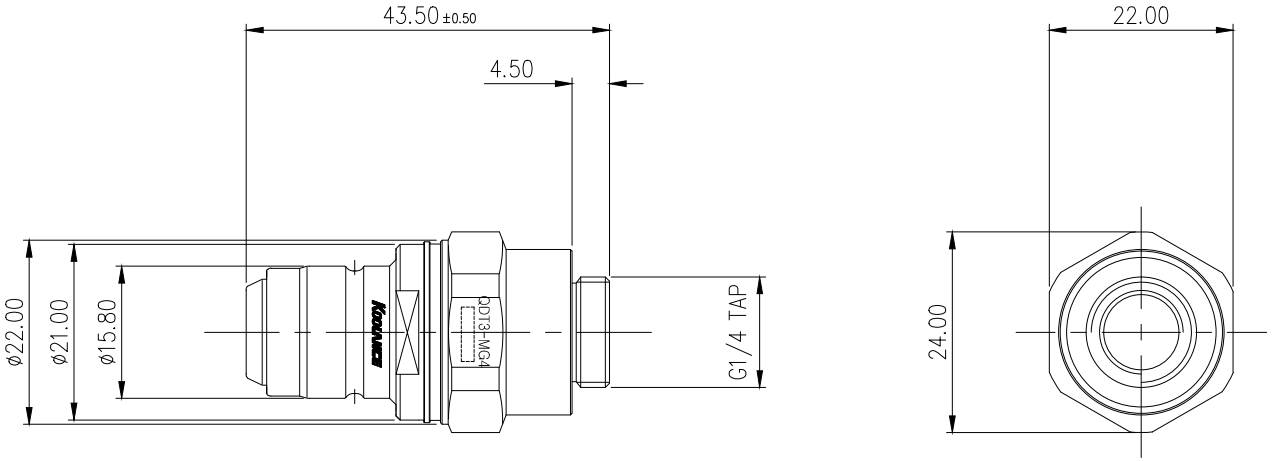

REV	DATE	CONTENTS	APPD BY

REVISION

NO.	DESCRIPTION				MATER'L	QUANTITY	REMARKS
KOOLANCE					UNIT MM	PART NO. QDT3-MG4	
	BY	BY	BY	APPRD BY	SCALE N/S	TITLE DIMENSION	
DATE					3RD ANGLE		
	S.J.LEE				DWG. NO.	ITEM QDT3	

File