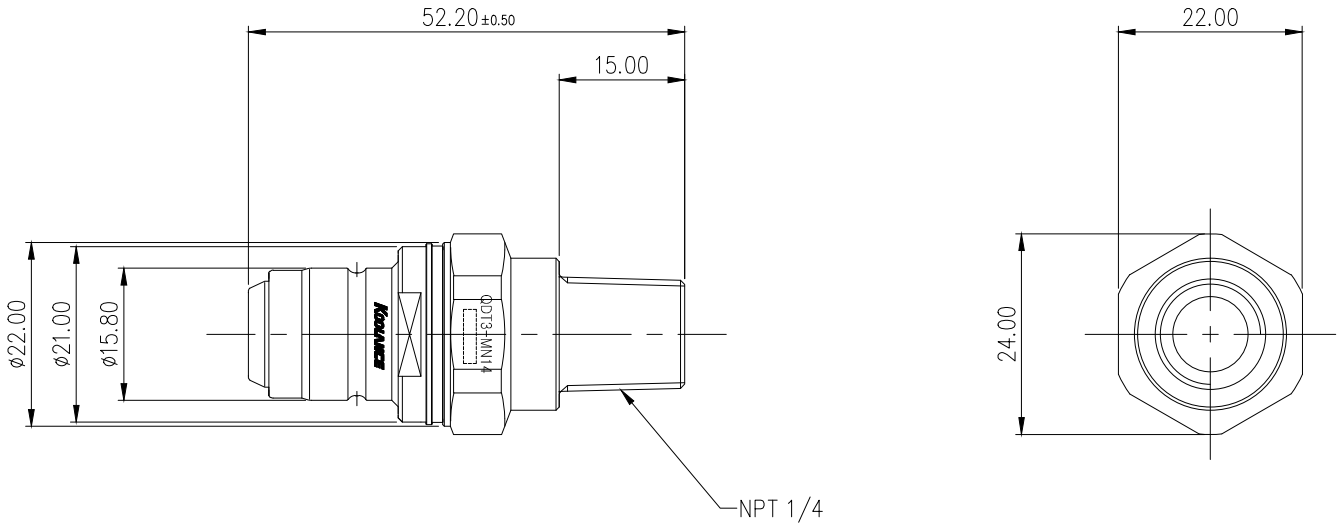

REV	DATE	CONTENTS	APPD BY

REVISION

NO.	DESCRIPTION	MATER'L	QUANTITY	REMARKS
KOOLANCE		UNIT MM	PART NO. QDT3-MN14	
	BY / BY / BY / APPRD BY	SCALE N/S	TITLE DIMENSION	
DATE		3RD ANGLE		
	S.J.LEE	DWG. NO.	ITEM QDT3	

File