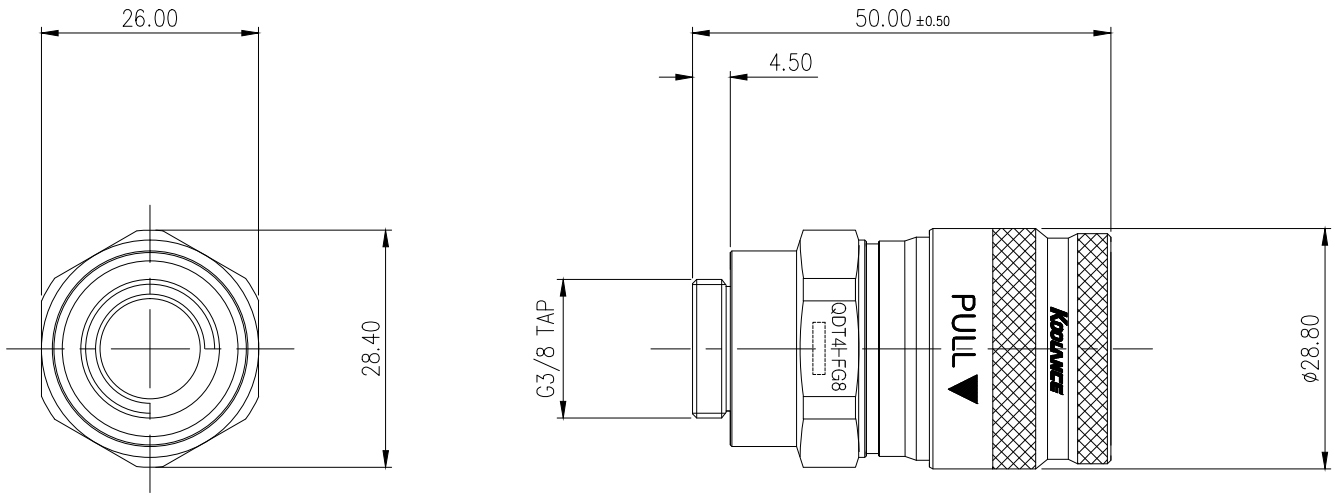


| | | | |
|---|---|---|---|
| | | | |
| | | | |
| | | | |
| | | | |
| | | | |
| REV | DATE | CONTENTS | APPD BY |

REVISION

| | | | | | | |
|---|---|---|---|---|---|---|
| NO. | DESCRIPTION | | | | MATER'L | QUANTITY | REMARKS |
| KOOLANCE® | | | | | UNIT MM | PART NO. QDT4-FG8 | |
| | BY | BY | BY | APPRD BY | SCALE N/S | TITLE DIMENSION | |
| DATE | | | | | 3RD ANGLE | | |
| | S.J.LEE | | | | DWG. NO. | ITEM QDT4 | |
| | | | | | | | |

File