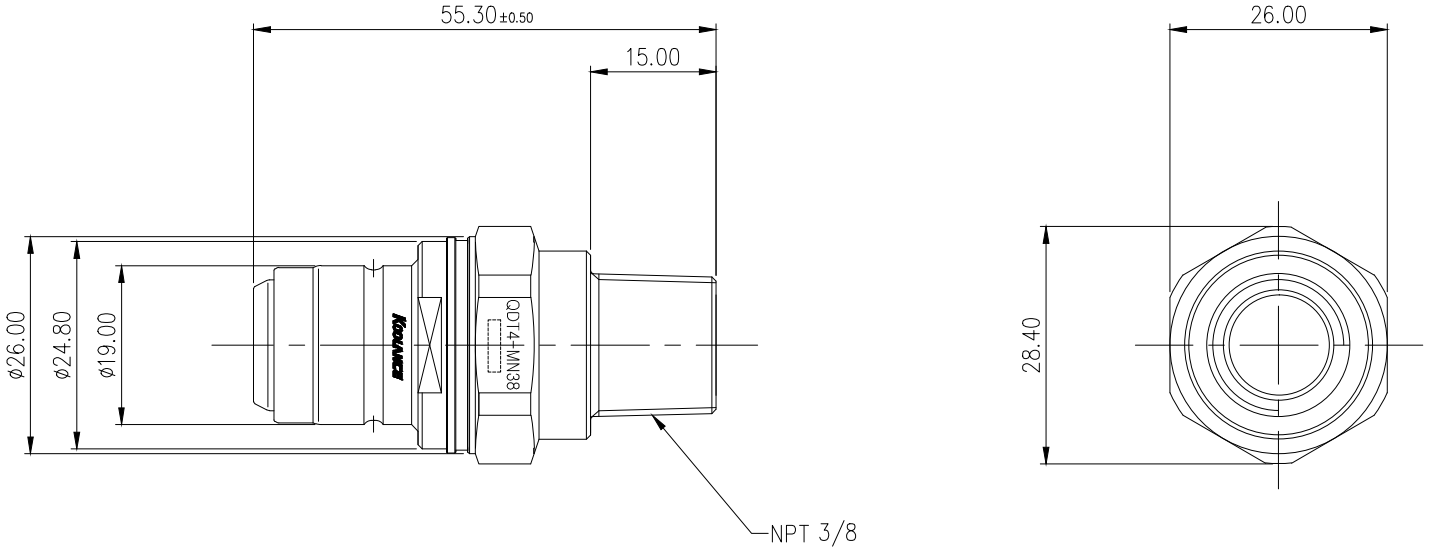

REV	DATE	CONTENTS	APPD BY

REVISION

NO.	DESCRIPTION			MATER'L	QUANTITY	REMARKS
KOOLANCE				UNIT MM	PART NO. QDT4-MN38	
	BY	BY	BY	APPRD BY	SCALE N/S	TITLE DIMENSION
DATE					3RD ANGLE	
	S.J.LEE				DWG. NO.	ITEM QDT4

File