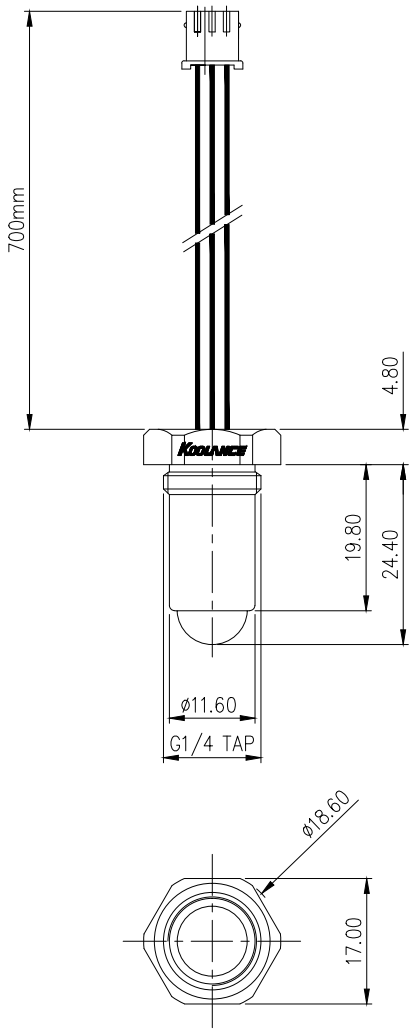

⚠			
REV	DATE	CONTENTS	APPD BY
REVISION			

NO.	DESCRIPTION			MATER'L		QUANTITY	REMARKS
KOOLANCE				UNIT	MM	PART NO. SEN-LVLIR01	
	BY	BY	BY	APPRD BY	SCALE	N/S	TITLE DIMENSION
DATE					3RD ANGLE		
2017.10.19		song			DWG. NO.		ITEM Level Sensor