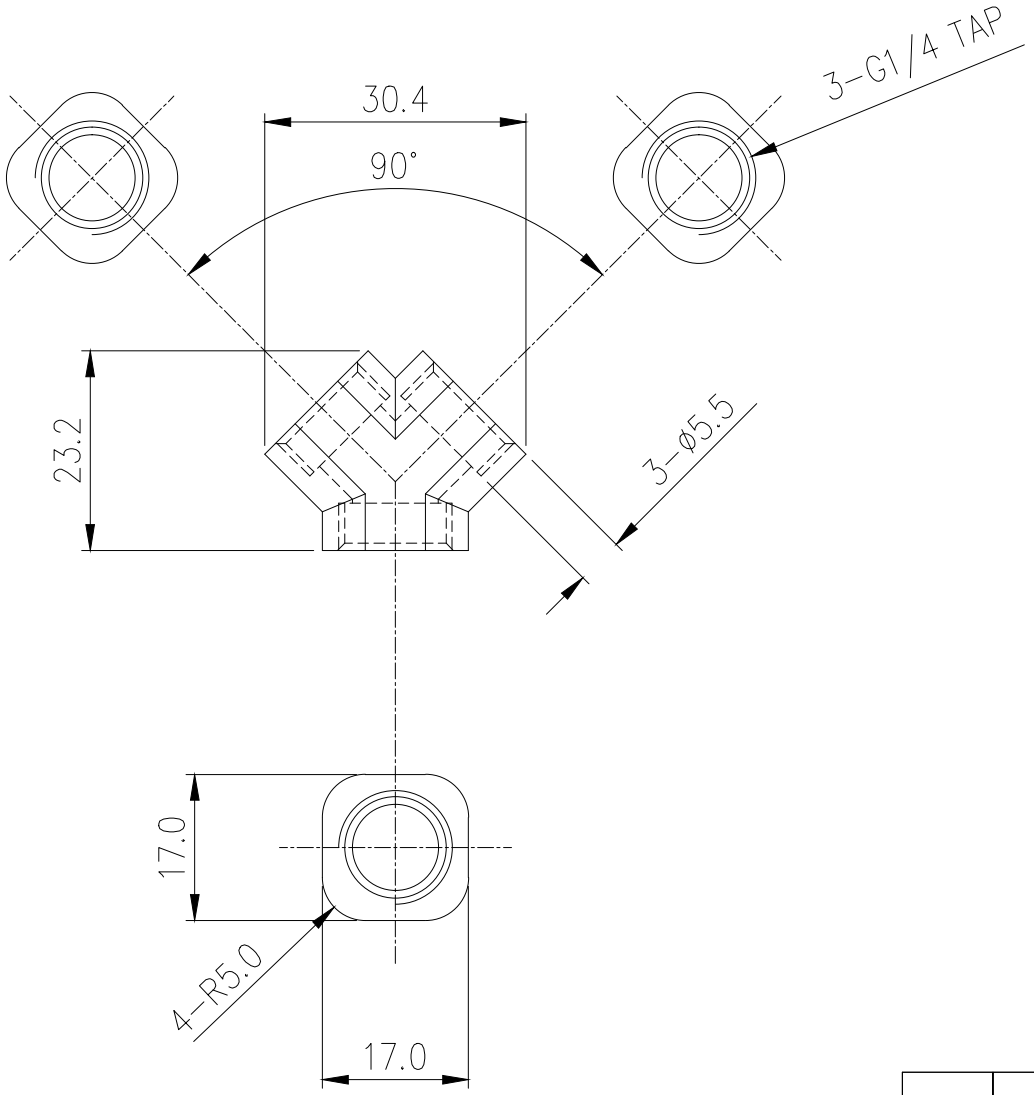

NO.	DESCRIPTION				MATER'L		QUANTITY	REMARKS
KOOLANCE					UNIT	MM	APPAR SPL-YF3G4	
	BY	BY	BY	APPRO BY	SCALE	N/S	TITLE Ass'y	
DATE					3RD ANGLE			
JAN.14.2021	S.J.LEE				CODE NO.		DWG. NO.	

File