www.koolance.com

Specifications Sheet

Generated: 2026-11-24

P/N: FIT-V16G38

Barb Fitting for ID 16mm (5/8in), G 3/8 BSPP



Single barb fitting for 5/8in (16mm) ID tubing. G 3/8 BSPP (parallel) thread.

General	
Weight	0.16 lb (0.07 kg)
Max Pressure Tolerance @ 25°C	15kgf/cm2 (213.4psi)
Max Temperature Tolerance	120°C (248°F)
Wetted Materials	Brass, Nickel Plating, EPDM

File

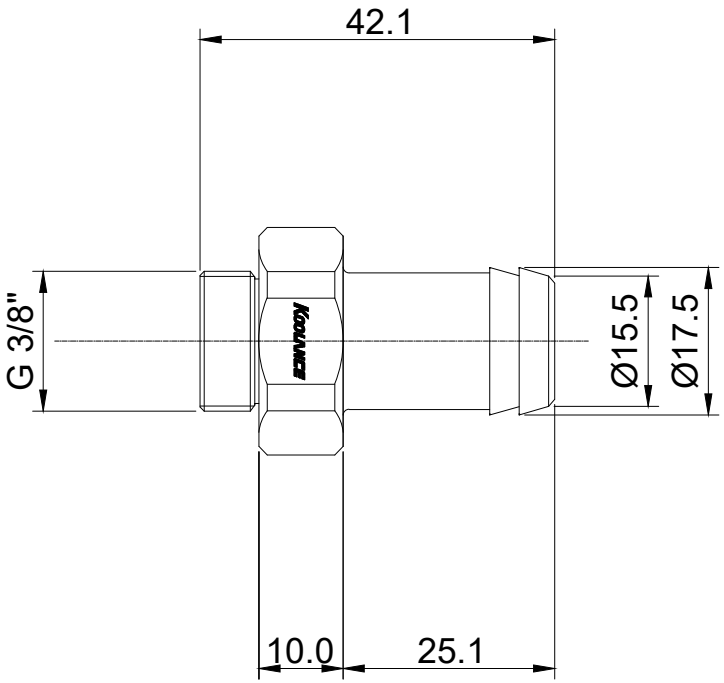

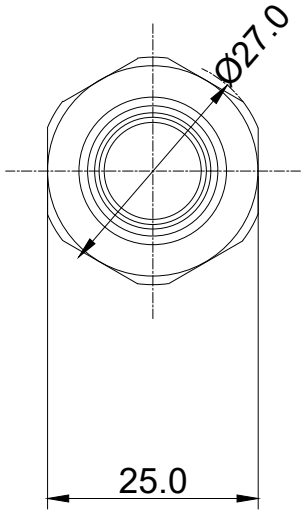

NO.	DESCRIPTION	MATER'L	QUANTITY	REMARKS
KOOLANCE		UNIT MM	ITEM FIT-V16G38	
		SCALE N/S	TITLE Ass'y	
	BY / BY / BY / APPRD BY	DECIMAL PLACES 0 : ±0.3, 0.X : ±0.1, 0.XX : ±0.05		
DATE			DWG. NO.	PAGE
	SK.AN	CODE NO.		