www.koolance.com

Specifications Sheet

Generated: 2026-11-19

P/N: FIT-V13X19-BK

Compression Fitting for 13mm x 19mm (1/2in x 3/4in) *Black*, G 1/4 BSPP



Single fitting for 1/2in (13mm) ID, 3/4in (19mm) OD tubing. G 1/4 BSPP (parallel) thread fitting.

General	
Weight	0.09 lb (0.04 kg)
Max Pressure Tolerance @ 25°C	15kgf/cm2 (213.4psi)
Max Temperature Tolerance	120°C (248°F)
Wetted Materials	Brass, EPDM

File

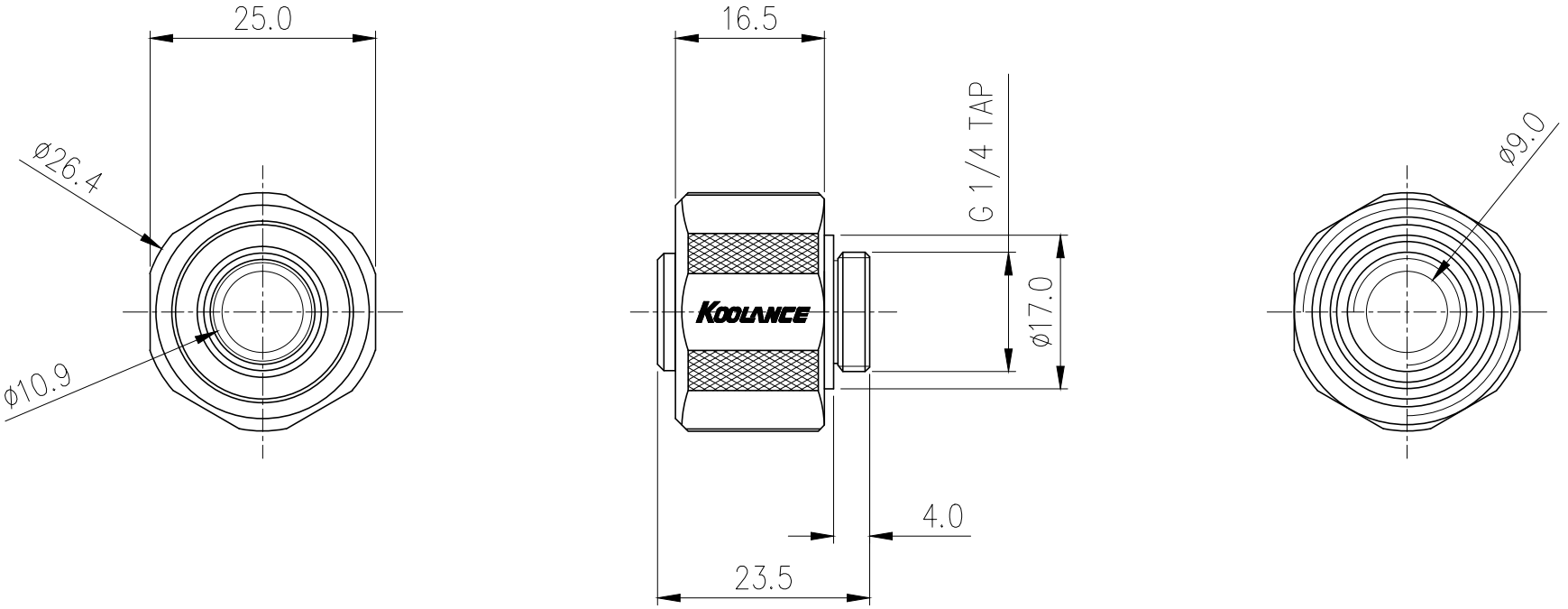

NO.	DESCRIPTION	MATER'L	QUANTITY	REMARKS
KOOLANCE INC.		UNIT MM	APPAR FIT-V13X19(-BK)	
	BY BY BY APPRD BY	SCALE N/S	TITLE Ass'y	
DATE		3RD ANGLE		
05.01.2014	S.J.LEE	REF. NO.	DWG. NO.	

REV	DATE	CONTENTS	REVD BY	CHKD BY	APPD BY
2					
1					

REVISION