www.koolance.com

Specifications Sheet

Generated: 2026-11-23

P/N: FIT-L13G38

Rotary Elbow Barb Fitting for 13mm (1/2in) ID, G 3/8 BSPP



Single rotational angled fitting for 1/2in (13mm) ID tubing. G 3/8 BSPP (parallel) thread. Tube clamp for 5/8in (16mm) OD included.

General	
Weight	0.13 lb (0.06 kg)
Max Pressure Tolerance @ 25°C	8kgf/cm2 (113.8psi)
Max Temperature Tolerance	100°C (212°F)
Wetted Materials	Brass, Nickel Plating, EPDM

File

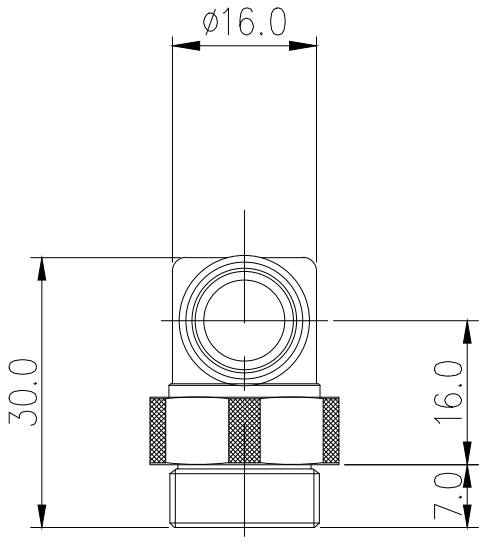

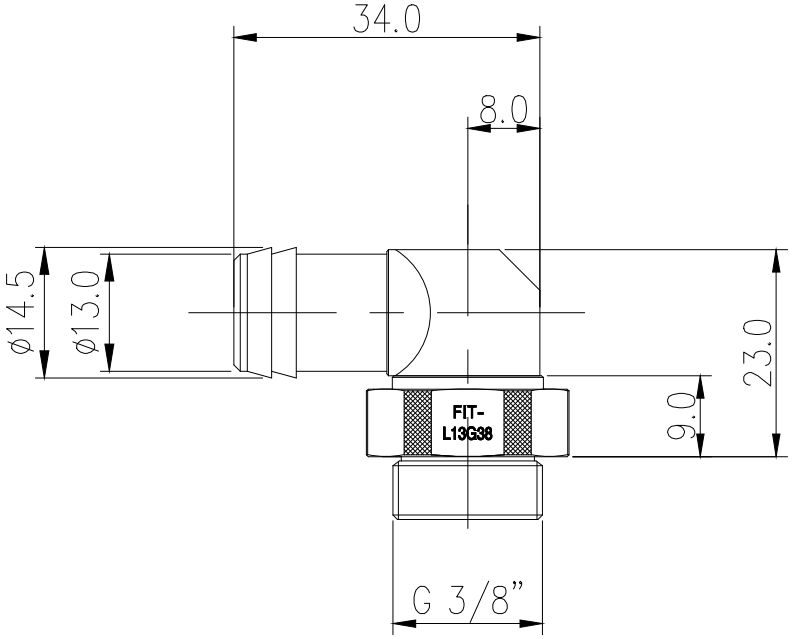

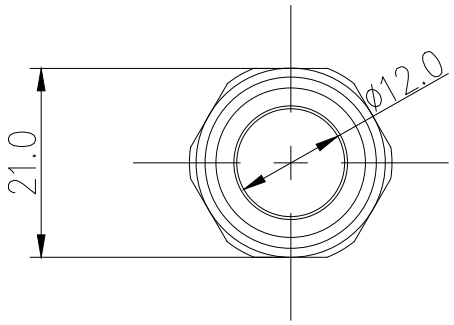

NO.	DESCRIPTION	MATER'L	QUANTITY	REMARKS
KOOLANCE		UNIT MM	APPAR FIT-L13G38	
	BY BY BY APPRD BY	SCALE N/S	TITLE Ass'y	
DATE		3RD ANGLE		
	SK.AN	CODE NO.	DWG. NO.	