www.koolance.com

Specifications Sheet

Generated: 2026-11-16

P/N: HX-360

Radiator, 1x120mm HX-360, Aluminum



Instantly increase your system's performance with a second radiator. The HX-360 provides an approximate 400W of added heat dissipation when coupled with a 120mm fan and Koolance PC3-700 or PC4-1000 system (not included). Single pass "S"-type aluminum louver fin. Includes two 3/8in (10mm) ID screw-in fittings, 1/4in (6mm) ID fittings optional.

General	
Weight	1.50 lb (0.68 kg)
Wetted Materials	Aluminum
Radiators	
Fan Capacity	1 x 120mm

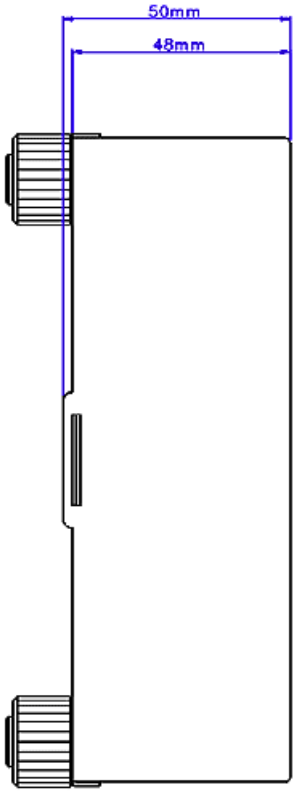

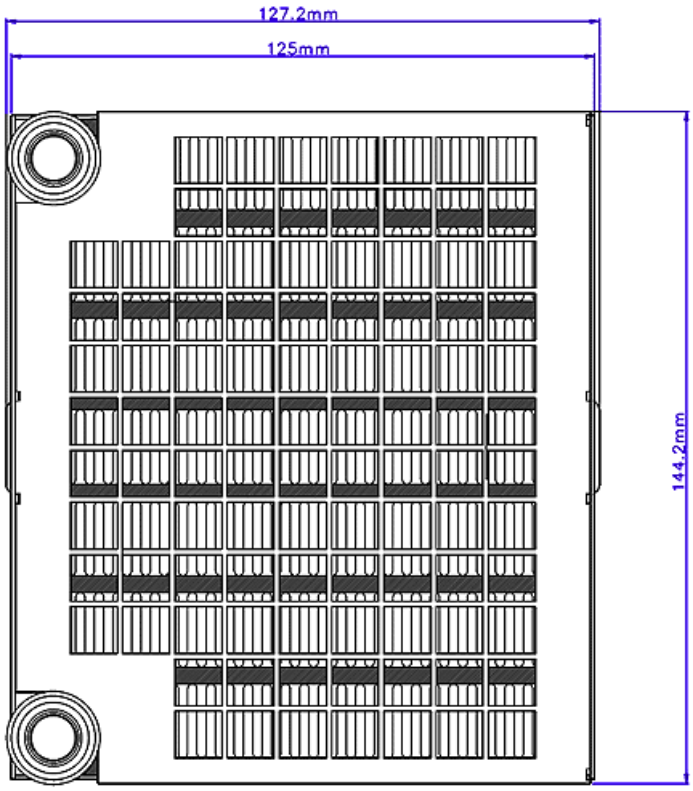
127.2mm
125mm
144.2mm

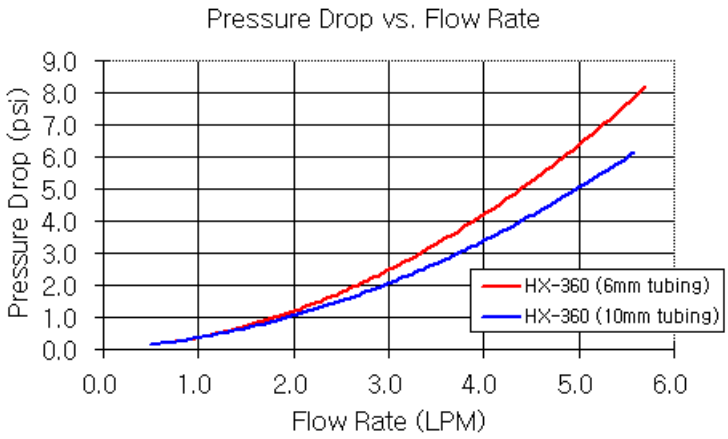
Pressure Drop vs. Flow Rate
Pressure Drop (psi)
9.0
8.0
7.0
6.0
5.0
4.0
3.0
2.0
1.0
0.0
0.0
1.0
2.0
3.0
4.0
5.0
6.0
Flow Rate (LPM)
HX-360 (6mm tubing)
HX-360 (10mm tubing)

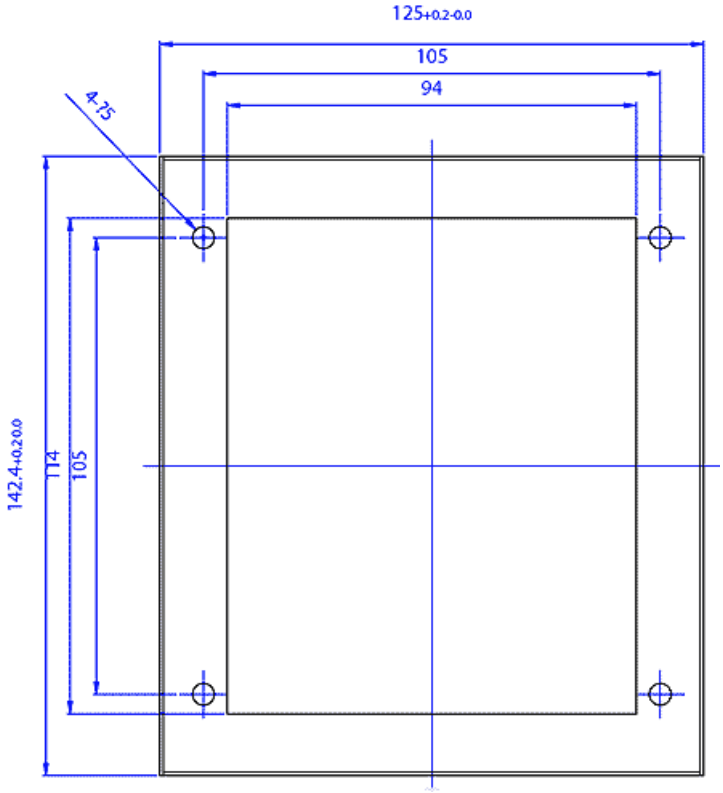
125+0.2-0.0
105
94
4-7.5
142.4+0.2-0.0
114
105

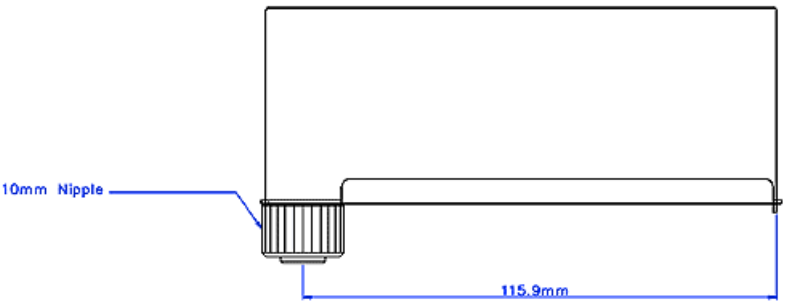
10mm Nipple
115.9mm

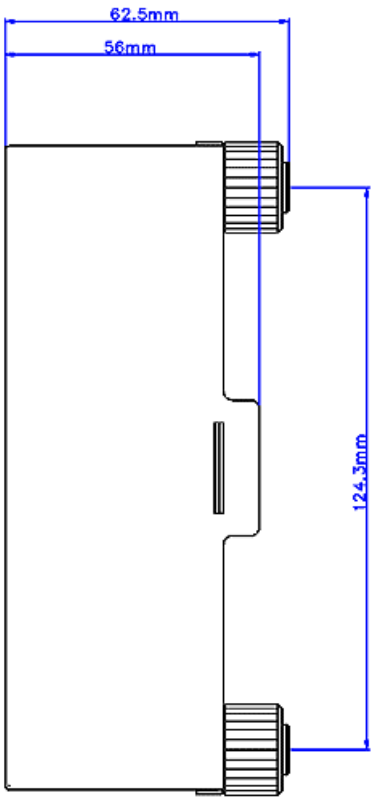
62.5mm
56mm
124.3mm