www.koolance.com

Specifications Sheet

Generated: 2026-11-22

P/N: NZL-V10BS

Swivel/Lock Barb Fitting for ID 10mm (3/8in), G 1/4 BSPP





Single barb fitting for 3/8in (10mm) ID tubing. This fitting swivels to relieve hose stress and accidental loosening. To tighten or untighten, simply push in on the fitting and twist. G 1/4 BSPP (parallel) thread. Spring clamp included for 1/2in (13mm) OD tubing.

General	
Weight	0.05 lb (0.02 kg)
Fitting Thread	G 1/4 BSPP
Max Pressure Tolerance @ 25°C	8kgf/cm2 (113.8psi)
Max Temperature Tolerance	100°C (212°F)
Wetted Materials	Brass, Nickel Plating, EPDM

File

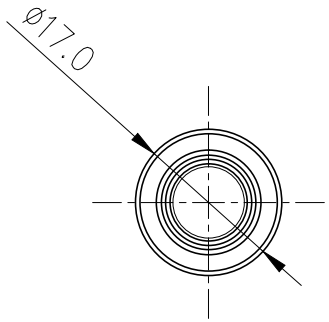

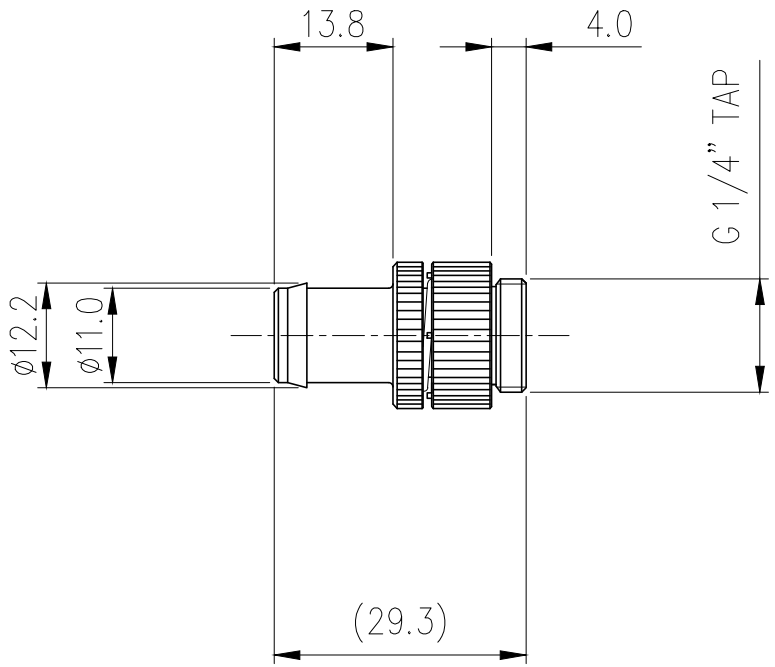

NO.	DESCRIPTION				MATER'L		QUANTITY	REMARKS
KOOLANCE					UNIT	MM	APPAR NZL-V10BS	
	BY	BY	BY	APPRO BY	SCALE	N/S	TITLE Ass'y	
DATE					3RD ANGLE			
04/22/2017	S.J.LEE				CODE NO.		DWG. NO.	