www.koolance.com

Specifications Sheet

Generated: 2026-11-20

P/N: PMP-800

PMP-800 Pump, G 3/8 BSP



CAUTION: Due to its high output, this pump might exceed the maximum pressure specifications of certain Koolance products, such as copper radiators and acrylic reservoirs. To avoid permanent damage or leaks, please confirm the specifications for each component before selecting this pump.

- Maximum Flow Rate: 42L/min (11.1 gal/min)
- Maximum Head Pressure: 28m (92ft)
- Motor: Brushless DC
- Power Consumption (at max): 150W
- Voltage Range: 12 to 24 VDC
- Native PWM support: 100Hz~1kHz
- Maximum Temperature: 75°C (167°F)
- Electrical Connector: 4-pin Molex
- Hose Connections: G 3/8 BSPP Threads
- Weight: 1700g (3.75lbs)

General	
Weight	3.75 lb (1.70 kg)
Fitting Thread	G 3/8 BSPP
Max Pressure Tolerance @ 25°C	3kgf/cm2 (42.7psi)
Max Temperature Tolerance	75°C (167°F)
Wetted Materials	PPE, Carbon, Ceramic, EPDM, ABS, POM, Ferrite
Pumps	
Expected Lifetime	30,000 hrs. MTBF
Max Flow Rate	42L/min (11.1 gal/min)
Max Power	150W
Max Static Head	28m (92ft)
Speed Knob	no
Tachometer	yes
Type	Magnetic Centrifugal
Voltage	8-24 VDC

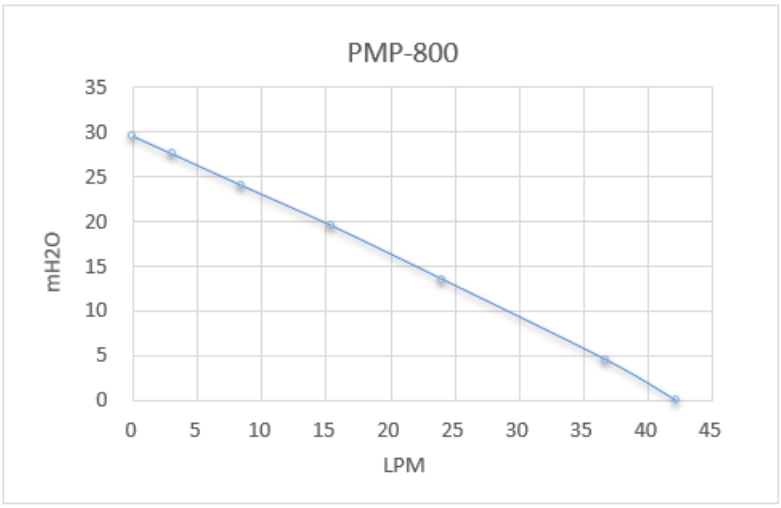
PMP-800
mH2O
35
30
25
20
15
10
5
0
0
5
10
15
20
25
30
35
40
45
LPM

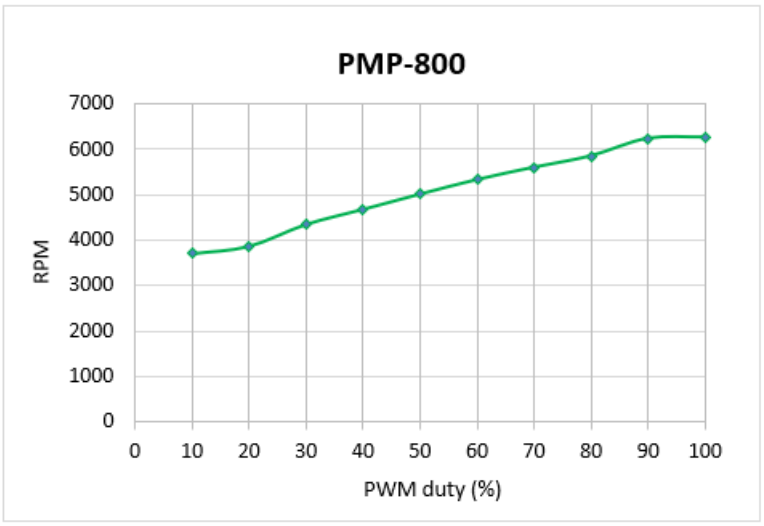
PMP-800
RPM
7000
6000
5000
4000
3000
2000
1000
0
0
10
20
30
40
50
60
70
80
90
100
PWM duty (%)

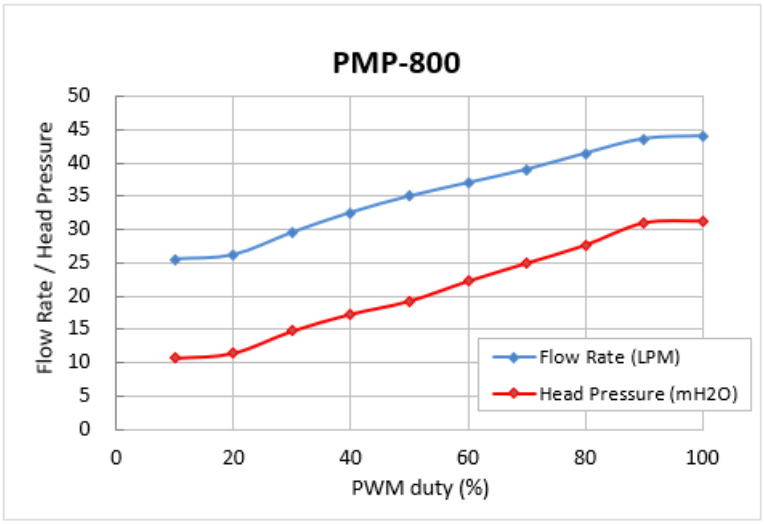
PMP-800
Flow Rate / Head Pressure
50
45
40
35
30
25
20
15
10
5
0
0
20
40
60
80
100
PWM duty (%)
Flow Rate (LPM)
Head Pressure (mH2O)

File

24V DC, 6.3A

< 4 Pin Connector >

- Housing : Molex 5557-04(or Equivalent)
- PinTerminal : Molex 5556 (or Equivalent)

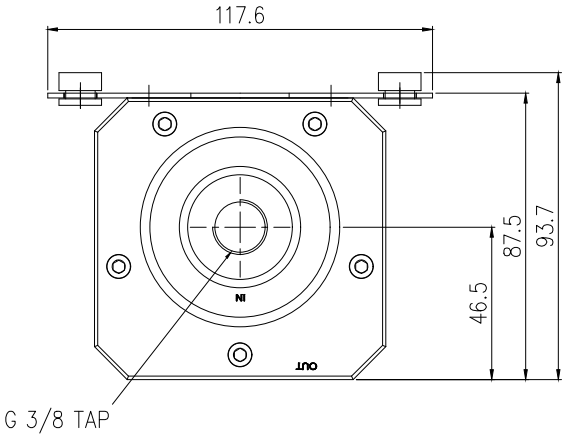

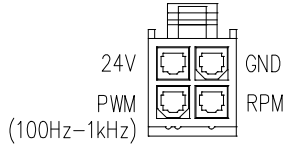

< FRONT VIEW >

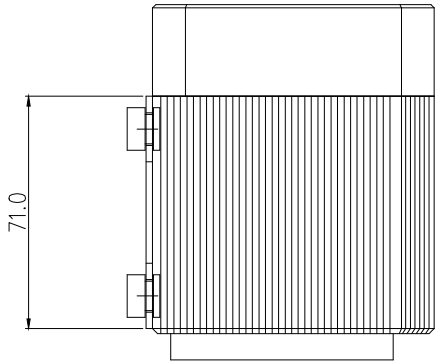

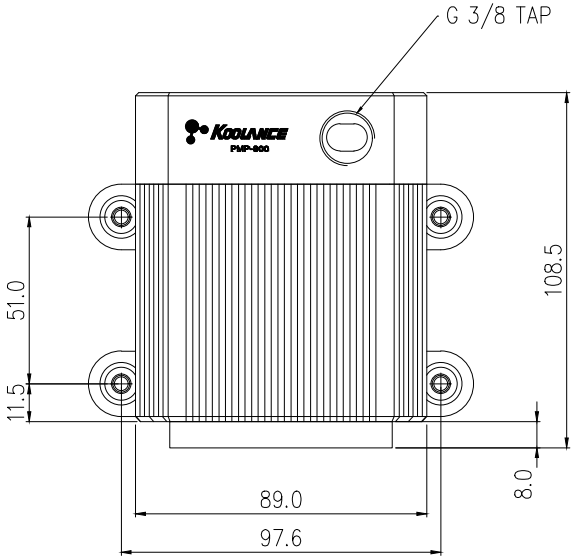

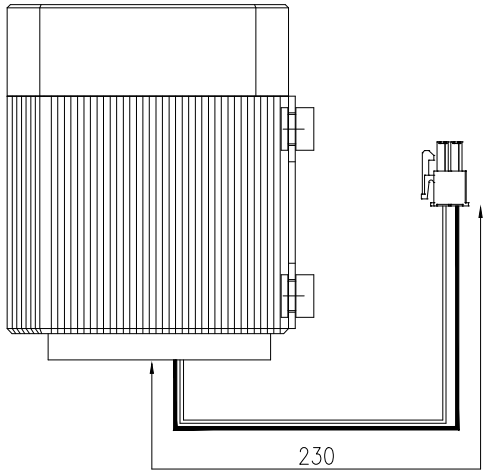

NO.	DISCRIPTION				MATER'L		QUANTITY	REMARKS
KOOLANCE®					UNIT	MM	ITEM PMP-800	
	BY	BY	BY	APPRO BY	SCALE	N/S	TITLE Ass'y	
DATE					3RD ANGLE			
	SK.AN				CODE NO.		DWG. NO.	PAGE