www.koolance.com

Specifications Sheet

Generated: 2026-11-20

P/N: COV-RP400

Pump Fitting & Reservoir Base for PMP-400, Rev.2.1



COV-RP400 is an acetal fitting and reservoir base for the Koolance PMP-400 pump. Pump, reservoir, and fittings are sold separately. Along with enabling the use of any G 1/4 BSPP (parallel) thread fitting style and diameter, it allows flow to be specifically directed for increased pump performance or broader chassis integration. Fitting base, mounting bracket, coupler for 60mm OD reservoirs, socket plug, and mounting hardware is included.

Koolance 60mm OD acrylic reservoir bodies can be directly connected to the COV-RP400 by using the included reservoir coupler. For 80mm OD reservoirs, use separate reservoir thread adapter TNK-CNT50T70.

General	
Weight	0.80 lb (0.36 kg)
Fitting Thread	G 1/4 BSPP
Max Pressure Tolerance @ 25°C	2kgf/cm2 (28.5psi)
Max Temperature Tolerance	80°C (176°F)
Wetted Materials	Nickel-Plated Brass, POM Acetal, Stainless Steel, EPDM

File

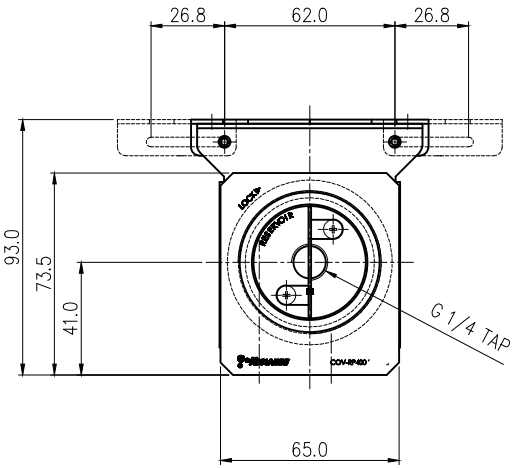

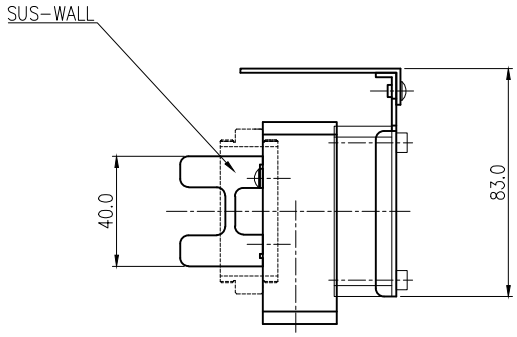

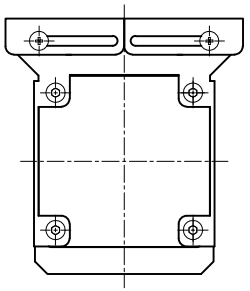

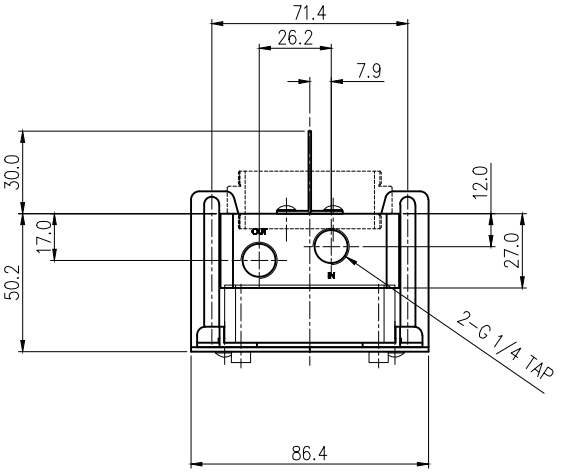

REV	DATE	CONTENTS	REVD BY	CHKD BY	APPD BY

REVISION

NO.	DESCRIPTION	MATER'L	QUANTITY	REMARKS
KOOLANCE INC.		UNIT MM	APPAR COV-RP400	
	BY BY BY APPRO BY	SCALE N/S	TITLE SUS-wall version Ass'y	
DATE		3RD ANGLE		
	S.J.LEE	REF. NO.	DWG. NO.	