www.koolance.com

Specifications Sheet

Generated: 2026-11-20

P/N: QD3-M10X16

QD3 Male Quick Disconnect No-Spill Coupling, Compression for 10mm x 16mm (3/8in x 5/8in)



Koolance patented quick disconnect no-spill coupling with automatic shutoff. 10mm (3/8in) ID, 16mm (5/8in) OD male straight connection with compression fitting. It will only fit a Koolance QD3 female quick disconnect.

After pulling the ring on the female QDC side, the quick-disconnect fittings will separate. Liquid on both sides will be automatically obstructed with approximately 0.2ml freed. Coolant volume lost upon disconnection will rise with internal pressure higher than 0.5kgf/cm2 (7psi).

General	
Weight	0.16 lb (0.07 kg)
Max No-Spill Pressure	0.5kgf/cm2 (7psi)
Max Pressure Tolerance @ 25°C	8kgf/cm2 (113.8psi)
Max Temperature Tolerance	80°C (176°F)
Min Pressure Tolerance @ 25°C	-1.0kgf/cm2 (-14psi)
Min Storage Temperature (*No Freezing)	-20ºC (-4ºF)
Seal Material	EPDM (Water/Glycol Liquids)

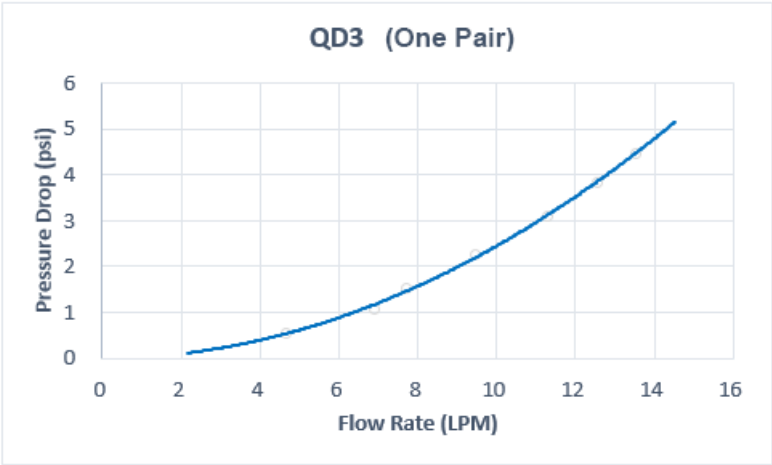

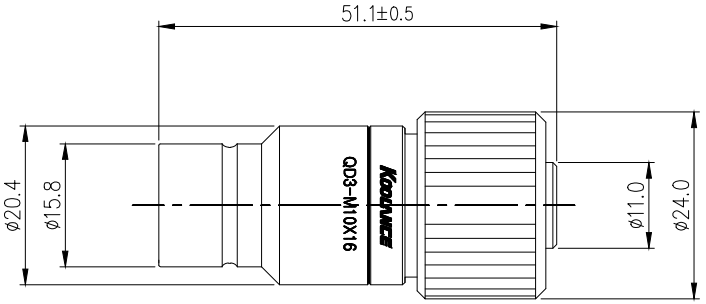

REV	DATE	CONTENTS	REVD BY	CHKD BY	APPD BY

REVISION

NO.	DISCRIPTION	MATER'L	QUANTITY	REMARKS

KOOLANCE INC.

	BY	BY	BY	APPRO BY
DATE				

DECIMAL PLACES	INCHES	MILLIMETRES
.XXX	±.005	±0.1
.XX	±.010	±0.3
.X	±.020	±0.5

ANGULAR DIMENSIONS	
XX°	±0.5°
XX.X°	±0.1°

SURFACE ROUGHNESS	SURFACE	SURFACE
	.63	1.6

UNIT	MM
SCALE	N/S
3RD ANGLE	
CODE NO.	

ITEM QD3

TITLE

QD3-M10X16

DWG. NO. | PAGE