www.koolance.com

Specifications Sheet

Generated: 2026-11-20

P/N: QD4-MG8

QD4 Male Quick Disconnect No-Spill Coupling, Male Threaded G 3/8 BSPP



Koolance patented quick disconnect no-spill coupling with automatic shutoff. G 3/8 BSPP (parallel) thread male fitting for screwing directly into a water block or other component of same threading. It will only fit a Koolance QD4 female quick disconnect.

After pulling the ring on the female QDC side, the quick-disconnect fittings will separate. Liquid on both sides will be automatically obstructed with approximately 0.2ml freed. Coolant volume lost upon disconnection will rise with internal pressure higher than 0.5kgf/cm2 (7psi). Maximum operating pressure is 8kgf/cm2 (113.8psi) @ 25°C. Maximum operating temperature is 100°C (212°F).

General	
Weight	0.25 lb (0.11 kg)
Max No-Spill Pressure	0.5kgf/cm2 (7psi)
Max Pressure Tolerance @ 25°C	8kgf/cm2 (113.8psi)
Max Temperature Tolerance	80°C (176°F)
Min Pressure Tolerance @ 25°C	-1.0kgf/cm2 (-14psi)
Min Storage Temperature (*No Freezing)	-20ºC (-4ºF)
Seal Material	EPDM (Water/Glycol Liquids)
Wetted Materials	Brass, Nickel Plating, Stainless Steel, EPDM

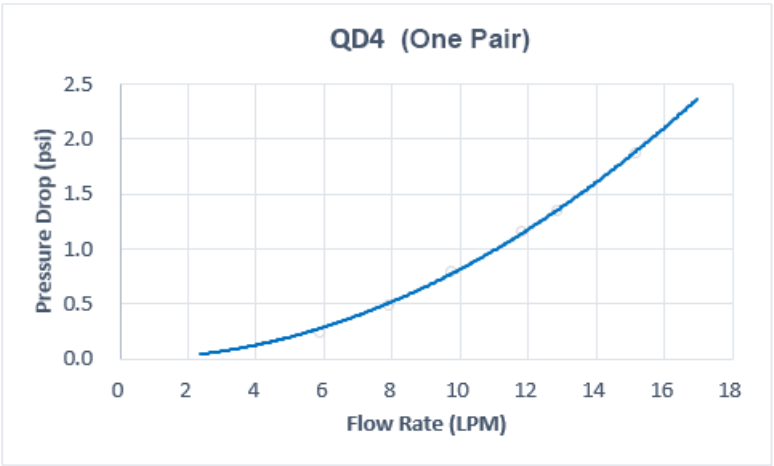

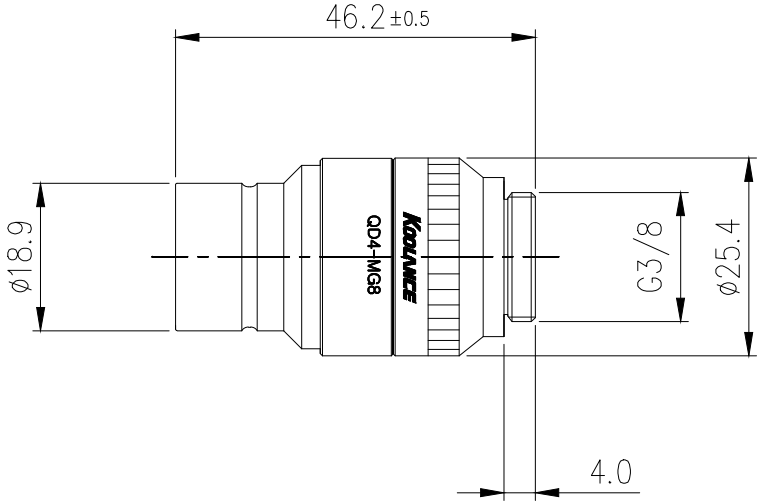

REV	DATE	CONTENTS	REVD BY	CHKD BY	APPD BY

REVISION

NO.	DISCRIPTION	MATER'L	QUANTITY	REMARKS

KOOLANCE INC.

	BY	BY	BY	APPRO BY
DATE				

DECIMAL PLACES	INCHES	MILLIMETRES
.XXX	±.005	±0.1
.XX	±.010	±0.3
.X	±.020	±0.5

ANGULAR DIMENSIONS	
XX°	±0.5°
XX.X°	±0.1°

SURFACE ROUGHNESS	SURFACE	SURFACE
	.63	1.6

UNIT	MM
SCALE	N/S
3RD ANGLE	
CODE NO.	

ITEM QD4

TITLE QD4-MG8

DWG. NO. | PAGE