www.koolance.com

**Specifications Sheet**

Generated: 2026-11-23

# P/N: QD3-FSN14

## QD3 Female Quick Disconnect No-Spill Coupling, Male Threaded, 1/4 NPT




Koolance patented quick disconnect no-spill coupling with automatic shutoff. 1/4 NPT (tapered) threaded female fitting for screwing directly into a component of the same threading. It will only fit a Koolance QD3 male quick disconnect.

After pulling the ring on the female QDC side, the quick-disconnect fittings will separate. Liquid on both sides will be automatically obstructed with approximately 0.2ml freed. Coolant volume lost upon disconnection will rise with internal pressure higher than 0.5kgf/cm2 (7psi).

| General | |
|---|---|
| Weight | 0.17 lb (0.08 kg) |
| Fitting Thread | NPT 1/4 |
| Max No-Spill Pressure | 0.5kgf/cm2 (7psi) |
| Max Pressure Tolerance @ 25°C | 8kgf/cm2 (113.8psi) |
| Max Temperature Tolerance | 80°C (176°F) |
| Min Pressure Tolerance @ 25°C | -1.0kgf/cm2 (-14psi) |
| Min Storage Temperature (*No Freezing) | -20ºC (-4ºF) |
| Seal Material | EPDM (Water/Glycol Liquids) |
| Wetted Materials | Brass, Nickel Plating, Stainless Steel, EPDM |

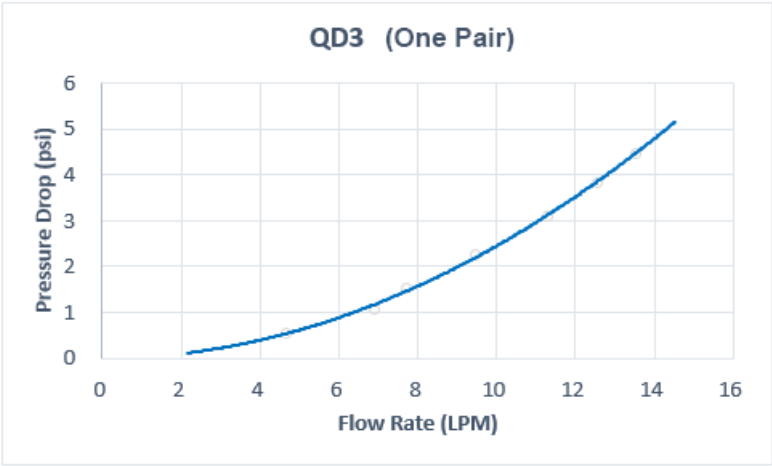

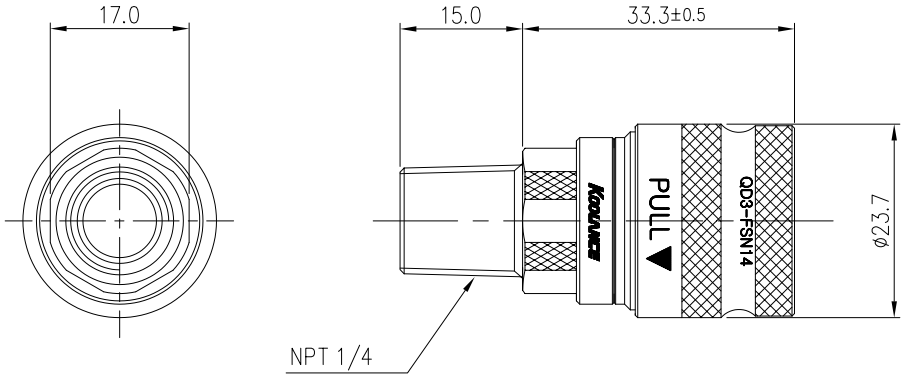


| REV | DATE | CONTENTS | REVD BY | CHKD BY | APPD BY |
|---|---|---|---|---|---|
| | | | | | |
| | | | | | |
| | | | | | |
| | | | | | |

REVISION

| NO. | DISCRIPTION | MATER'L | QUANTITY | REMARKS |
|---|---|---|---|---|
| | | | | |

KOOLANCE INC.

| | BY | BY | BY | APPRO BY |
|---|---|---|---|---|
| DATE | | | | |
| | SONG | | | |
| | | | | |

| DECIMAL PLACES | INCHES | MILLIMETRES |
|---|---|---|
| .XXX | ±.005 | ±0.1 |
| .XX | ±.010 | ±0.3 |
| .X | ±.020 | ±0.5 |
| ANGULAR DIMENSIONS | | |
| XX° | ±0.5° | |
| XX.X° | ±0.1° | |
| SURFACE ROUGHNESS | SURFACE | SURFACE |
| | .63 | 1.6 |

| | |
|---|---|
| UNIT | MM |
| SCALE | N/S |
| 3RD ANGLE | |
| CODE NO. | |

ITEM QD3 SHORT

TITLE QD3-FSN14

DWG. NO. | PAGE