www.koolance.com

Specifications Sheet

Generated: 2026-11-18

P/N: QD3-MS10-P

QD3 Male Quick Disconnect No-Spill Coupling, Panel Barb for ID 10mm (3/8in)



Koolance patented quick disconnect no-spill coupling with automatic shutoff. 10mm (3/8in) ID male panel-mountable barb fitting with spring clamp for 13mm (1/2in) OD. It will only fit a Koolance QD3 female quick disconnect.

After pulling the ring on the female QDC side, the quick-disconnect fittings will separate. Liquid on both sides will be automatically obstructed with approximately 0.2ml freed. Coolant volume lost upon disconnection will rise with internal pressure higher than 0.5kgf/cm2 (7psi).

General	
Weight	0.13 lb (0.06 kg)
Max No-Spill Pressure	0.5kgf/cm2 (7psi)
Max Pressure Tolerance @ 25°C	8kgf/cm2 (113.8psi)
Max Temperature Tolerance	80°C (176°F)
Min Pressure Tolerance @ 25°C	-1.0kgf/cm2 (-14psi)
Min Storage Temperature (*No Freezing)	-20ºC (-4ºF)
Seal Material	EPDM (Water/Glycol Liquids)
Wetted Materials	Brass, Nickel Plating, Stainless Steel, EPDM

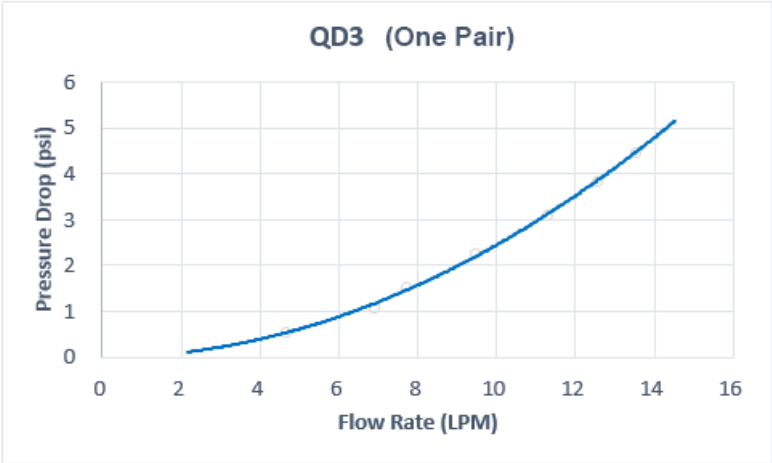

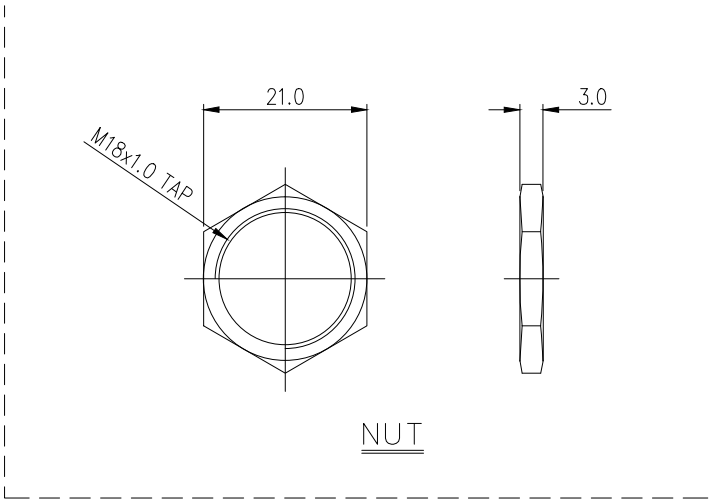

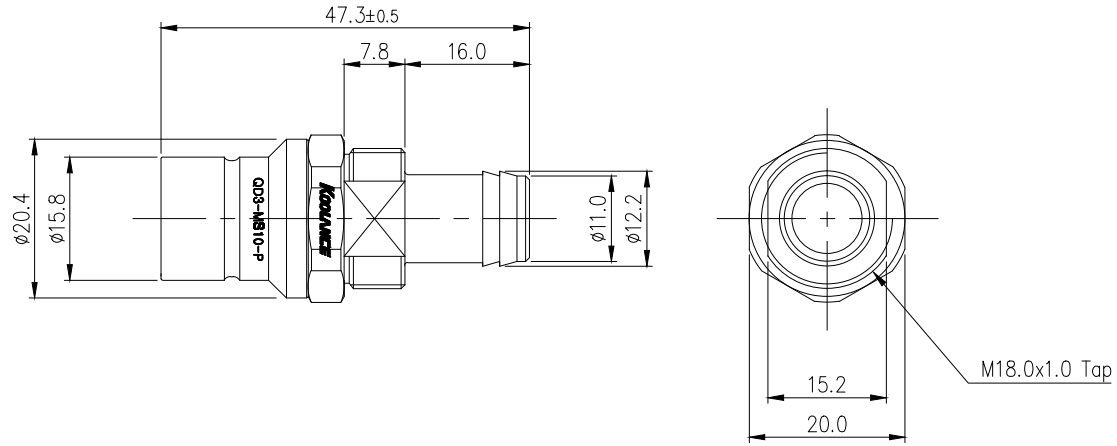

REV	DATE	CONTENTS	REVD BY	CHKD BY	APPD BY

REVISION

NO.	DISCRIPTION	MATER'L	QUANTITY	REMARKS

KOOLANCE INC.

	BY	BY	BY	APPRO BY
DATE				
	SONG			

DECIMAL PLACES	INCHES	MILLIMETRES
.XXX	±.005	±0.1
.XX	±.010	±0.3
.X	±.020	±0.5

ANGULAR DIMENSIONS	
XX°	±0.5°
XX.X°	±0.1°

SURFACE ROUGHNESS	SURFACE	SURFACE
	.63	1.6

UNIT	MM
SCALE	N/S
3RD ANGLE	
CODE NO.	

ITEM QD3

TITLE QD3-MS10-P

DWG. NO. PAGE