www.koolance.com

Specifications Sheet

Generated: 2026-11-18

P/N: QDT3-MG4

QDT3 EPDM Male Quick Disconnect No-Spill Coupling, Male Threaded G 1/4 BSPP



Koolance patented quick disconnect no-spill coupling with automatic shutoff. G 1/4 BSPP (parallel) thread male fitting for screwing directly into a water block or other component. It will only fit a Koolance QDT3 female quick disconnect.

After pulling the ring on the female QDC side, the quick-disconnect fittings will separate. Liquid on both sides will be automatically obstructed with approximately 0.2ml freed.

General	
Weight	0.11 lb (0.05 kg)
Fitting Thread	G 1/4 BSPP
Max No-Spill Pressure	10kgf/cm2 (142psi)
Max Pressure Tolerance @ 25°C	12kgf/cm2 (170.7psi)
Max Temperature Tolerance	80°C (176°F)
Min Pressure Tolerance @ 25°C	-1.0kgf/cm2 (-14psi)
Min Storage Temperature (*No Freezing)	-40ºC (-40ºF) Connected, -30ºC (-22ºF) Disconnected
Seal Material	EPDM (Water/Glycol Liquids)
Wetted Materials	Chrome-Plated Brass, Stainless Steel, EPDM

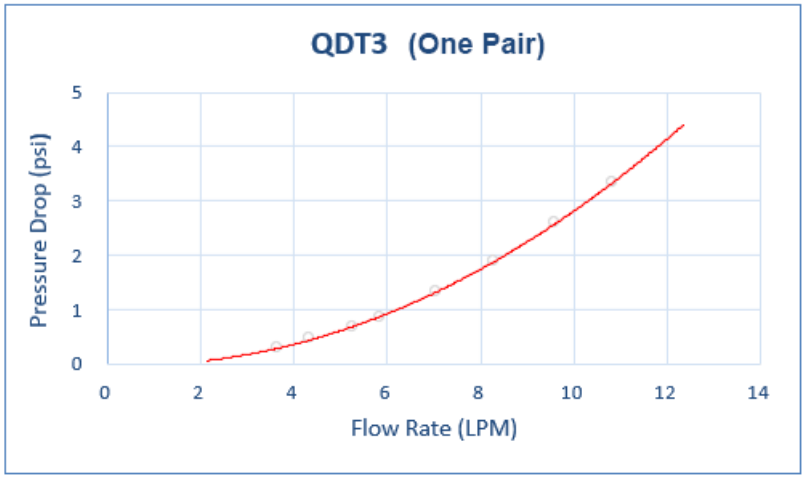

File

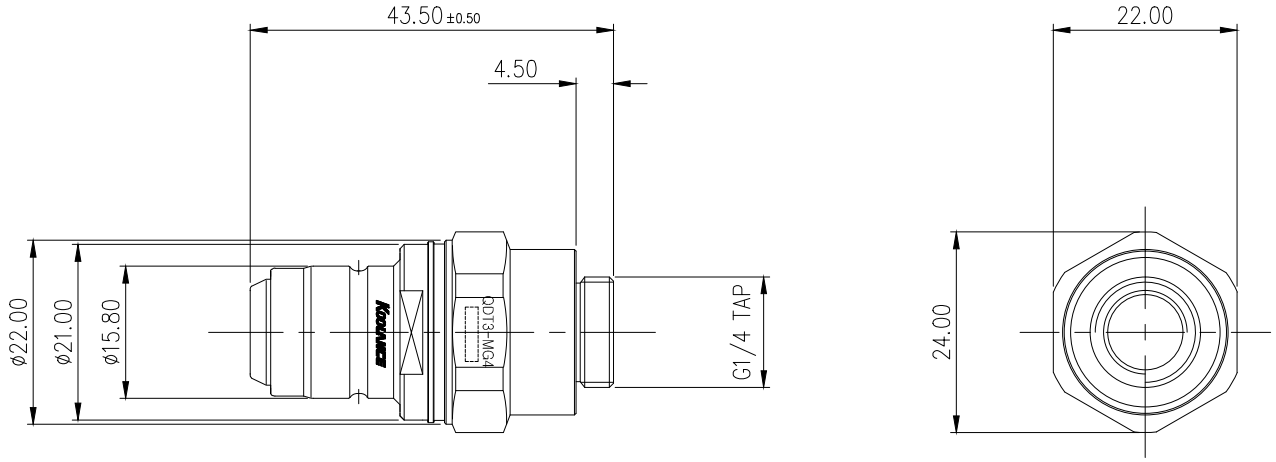

REV	DATE	CONTENTS	APPD BY

REVISION

NO.	DESCRIPTION	MATER'L	QUANTITY	REMARKS
KOOLANCE®		UNIT MM	PART NO. QDT3-MG4	
	BY / BY / BY / APPRD BY	SCALE N/S	TITLE DIMENSION	
DATE		3RD ANGLE		
	S.J.LEE	DWG. NO.	ITEM QDT3	