www.koolance.com

Specifications Sheet

Generated: 2026-11-25

P/N: BLT-HX038

Radiator Mounting Screw & Nut, 38mm



Four mounting posts and black thumb nuts for easier assembly and removal of radiator fans. Fits fans up to 38mm thick plus the black nut with about 3mm left over. Uses a standard M4 thread. (Pliers may be needed to tighten the top nuts the first time.)

General	
Weight	0.06 lb (0.03 kg)

File

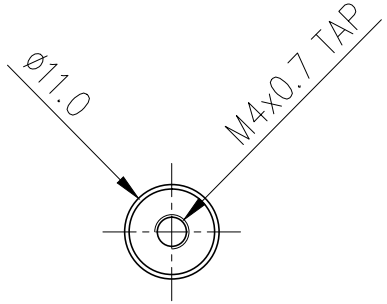

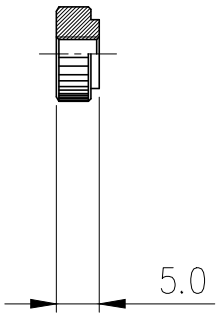

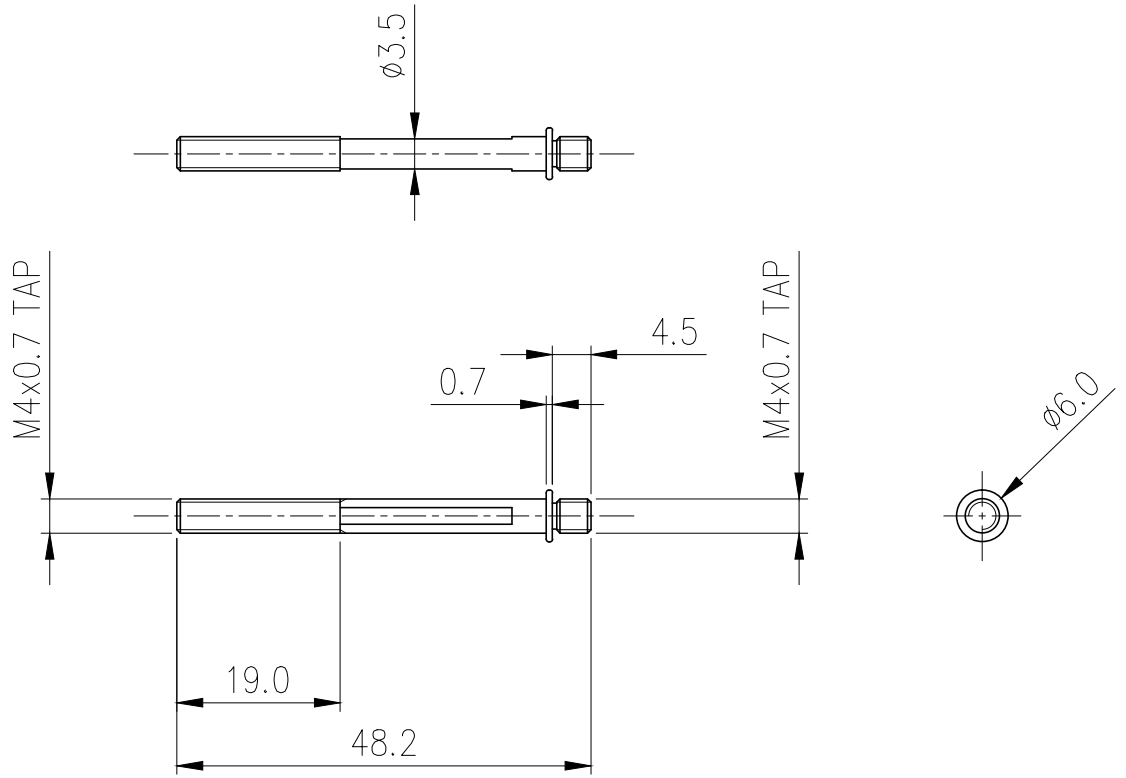

NO.	DESCRIPTION				MATER'L	QUANTITY	REMARKS
KOOLANCE					UNIT MM	APPAR BLT-HX038	
	BY	BY	BY	APPRD BY	SCALE N/S	TITLE Ass'y	
DATE					3RD ANGLE		
04/10/2017	S.J.LEE				CODE NO.	DWG. NO.	